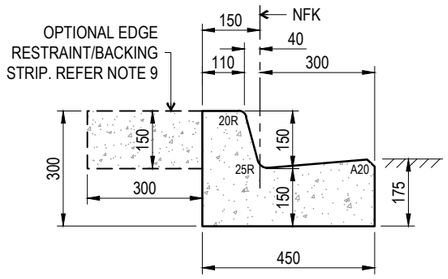

STANDARD TYPE 'E'

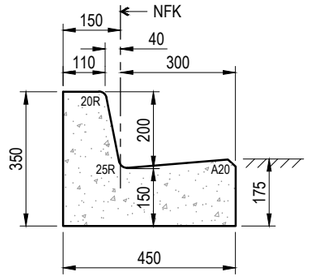

200 TYPE 'E'

USED ADJACENT TO PARKS
(WHERE CARRIAGEWAY WIDTH IS ≥ 7.5m)

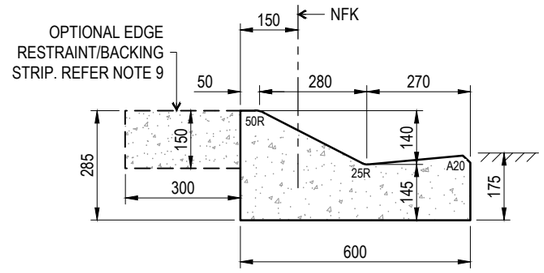

TYPE 'D'

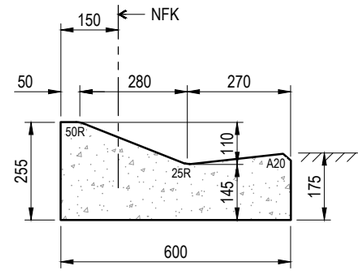

TYPE 'F' LOWER MOUNTABLE

USED FOR FOREST LAKE ONLY (NON BUS ROUTES).

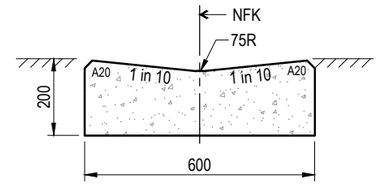

INVERT

KERB AND CHANNEL

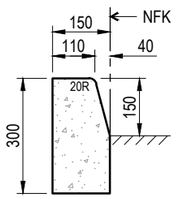

STANDARD TYPE 'E'

USED WHERE ONE-WAY CROSSFALL NEGATES USE OF CHANNEL.

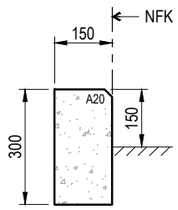

VERTICAL TYPE 'E'

USED AS PER "STANDARD TYPE 'E' KERB" TO MATCH EXISTING OLD PROFILE.

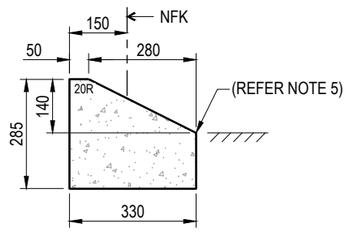

TYPE 'D'

USED WHERE ONE WAY CROSSFALL NEGATES USE OF CHANNEL.

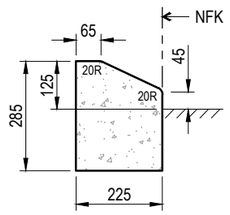

TYPE 'F'

USED FOR FOREST LAKE ONLY (NON BUS ROUTES).

KERB ONLY

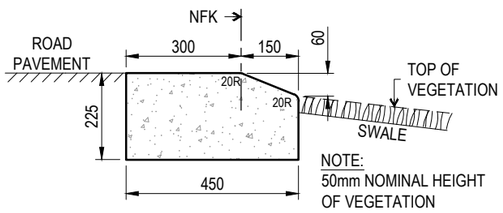

TYPE 'G'

USED FOR WATER SENSITIVE URBAN DESIGN (WSUD) ONLY.

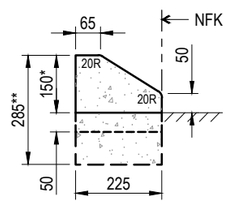

MOUNTABLE

150* DEEP PROFILE USED FOR TRAFFIC ISLANDS WITH CONCRETE INFILL ONLY. KEY 50 DEEP INTO PAVEMENT. 285** DEEP PROFILE (AS PER BSD-2002) USED FOR TRAFFIC ISLANDS WITH GRASS OR LANDSCAPE INFILL.

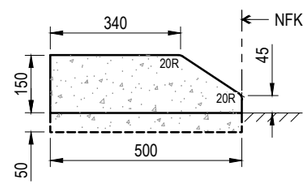

MOUNTABLE WITH BACKING STRIP

USED FOR TRAFFIC ISLANDS WITH GRASS OR LANDSCAPING INCLUDING ROUNDABOUTS, CHANNELISED INTERSECTIONS, TRAFFIC CONTROL DEVICES AND ISLANDS ON DIVIDED ROADS. KEY 50 DEEP INTO PAVEMENT.

EDGE RESTRAINTS (LANDSCAPING)

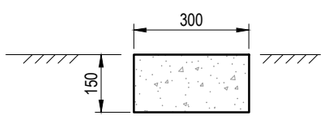

300 x 150

USED WITH NO VEHICLE LOADING.
USED AS RESTRAINT BETWEEN PAVEMENT AND/OR GRASS.
USED AS BACKING STRIP WITH TYPE 'E' AND TYPE 'D' KERB & CHANNEL.

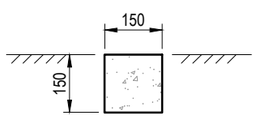

150 x 150

USED WITH NO VEHICLE LOADING.
USED AS RESTRAINT BETWEEN PAVEMENT AND/OR GRASS.

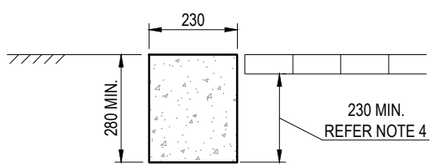

230 x 280 (MIN.)

USED FOR MAINTENANCE VEHICLE LOADING ONLY.
USED FOR RESTRAINING PAVERS FROM PAVEMENT OR GRASS.

NOTES:

1. MACHINE PLACED (SLIP FORMED OR EXTRUDED) CONCRETE TO BE GRADE S32, MINIMUM CEMENT CONTENT OF THE CONCRETE TO BE 320kg/m^3.
2. KERB PROFILES TO BE INSTALLED AS PER THE INFRASTRUCTURE DESIGN PLANNING SCHEME POLICY (IDPSP).
3. PRECAST OR HAND PLACED (IN SITU) CONCRETE TO BE GRADE N25.
4. THE EXTENT OF HAND PLACED (IN SITU) CONCRETE MUST NOT EXCEED 20m IN CONTIGUOUS LENGTHS (INCLUDING VEHICULAR ENTRANCES AND KERB RAMPS).
5. FOR 230 x 280 EDGE RESTRAINT, PROVIDE A MINIMUM DEPTH OF 230mm CLEAR OF ANY PAVER THICKNESS.
6. A NARROW CHANNEL MAY BE ADDED TO TYPE 'D' KERB PROFILE IF APPROVED.
7. PROVIDE CONTRACTION OR SHRINKAGE CONTROL JOINTS AT REGULAR INTERVALS NOT EXCEEDING 4m, BY FORMING GROOVES 40mm DEEP BY 6mm WIDE.
8. PROVIDE EXPANSION JOINTS WHERE THE KERB AND CHANNEL ABUTS SUBSTANTIAL EXISTING STRUCTURES SUCH AS BRIDGES, OR WHERE DIRECTED. WHERE RELEVANT, LOCATE JOINTS TO LINE UP WITH THE EXPANSION JOINTS IN ADJACENT STRUCTURES SUCH AS RIGID PAVEMENTS AND CONCRETE SLABS. CONSTRUCT JOINTS BY INSTALLING 10mm THICK COMPRESSIBLE PACKING FOR THE FULL WIDTH AND DEPTH OF THE KERB AND CHANNEL.
9. OPTIONAL EDGE RESTRAINT/BACKING STRIP MAY BE USED FOR KERB AND CHANNEL WITH LANDSCAPING BEHIND.
10. DIMENSIONS IN MILLIMETRES (U.N.O.).

LEGEND

A20	20 ARRIS
25R	25 RADIUS
50R	50 RADIUS
20R	20 RADIUS
NFK	NOMINAL FACE OF KERB

BRISBANE CITY

BRISBANE CITY COUNCIL STANDARD DRAWING

KERB PROFILES

PUBLISH DATE	SEP 2024
SCALE	NOT TO SCALE
DRAWING NUMBER	BSD-2001
ORIGINAL SIZE	A3
REVISION	E

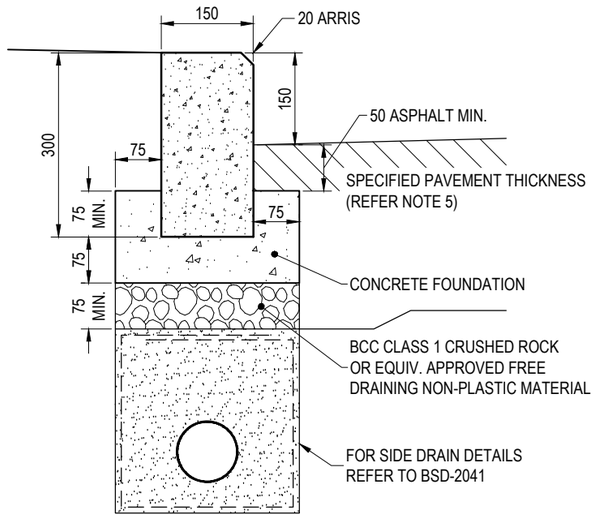

300 VERTICAL FACE KERB BLOCK

Mass = 66 Kg

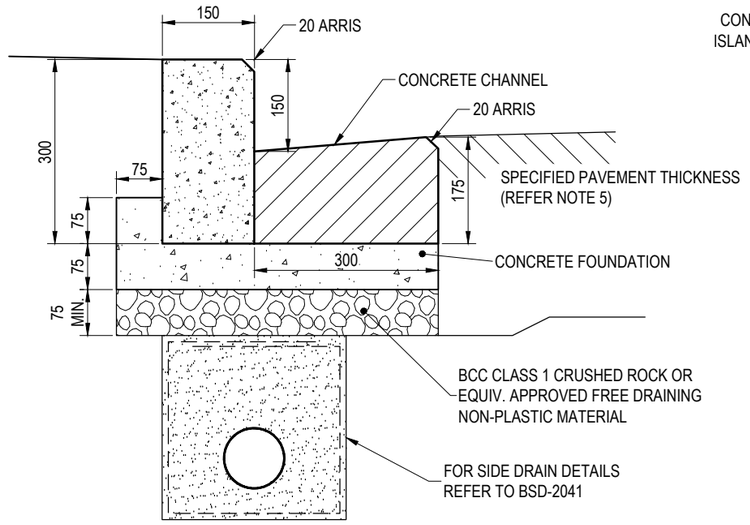

300 VERTICAL FACE KERB BLOCK WITH CHANNEL

(DESIGN SUITABLE FOR 300 PORPHYRY BLOCK IF AVAILABLE)

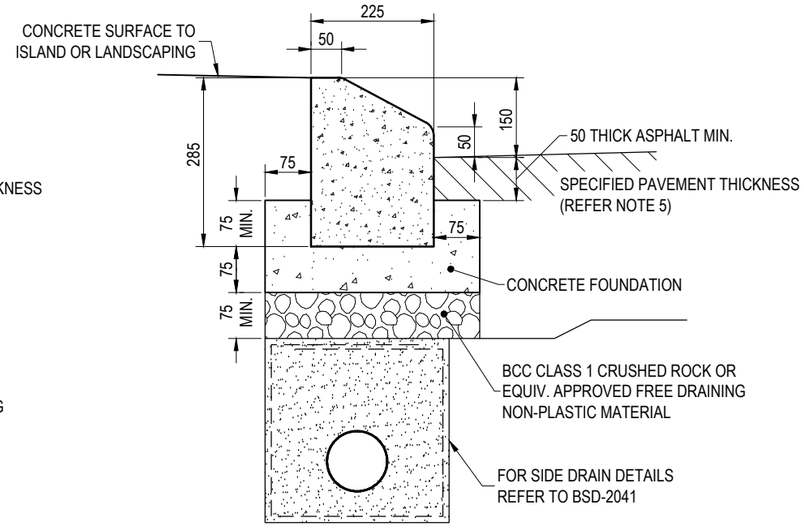

285 MOUNTABLE KERB ONLY

Mass = 73 Kg

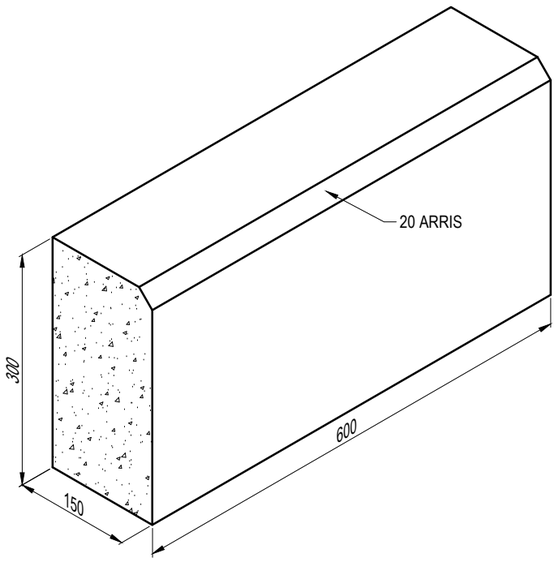

300 VERTICAL FACE KERB BLOCK

600 x 300 x 150 - REFER NOTE 6

Mass = 66 Kg

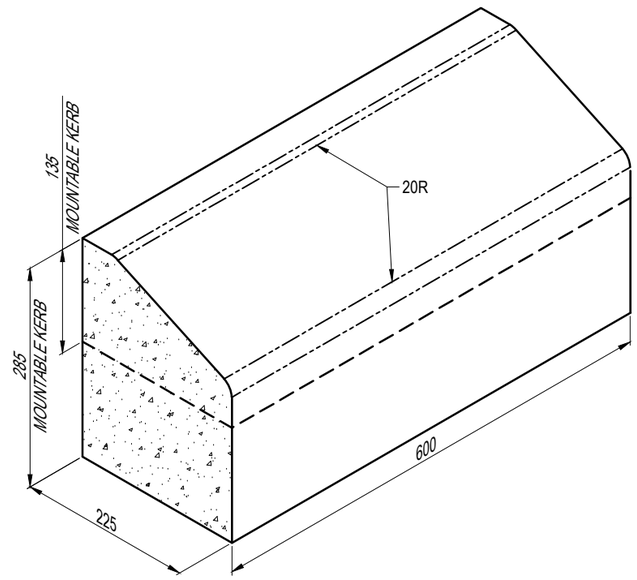

285 MOUNTABLE KERB ONLY

600 x 285 x 225 - REFER NOTE 6

Mass = 73 Kg

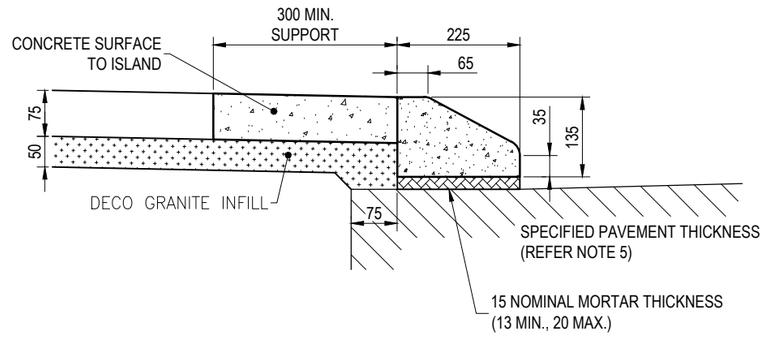

135 MOUNTABLE KERB ONLY

(600 x 135 x 225)

Mass = 33 Kg

NOTES:

1. PRECAST CONCRETE TO BE GRADE N25.
2. IN-SITU CONCRETE FOUNDATION TO BE GRADE N20.
3. INSITU CONCRETE CHANNEL TO BE GRADE N25.
4. KERB BLOCKS TO BE CUT IN HALF ON SHARP CURVES TO REDUCE CHORD LENGTH.
5. SPECIFIED PAVEMENT THICKNESS TO BE THICKENED IF NECESSARY OVER A 500mm WIDTH TO ADJOIN BASE OF FREE DRAINING LAYER TO ENSURE DRAINAGE OF PAVEMENT.
6. REFER BSD-2001 FOR VERTICAL FACE KERB AND MOUNTABLE KERB PROFILES.
7. DIMENSIONS IN MILLIMETRES (U.N.O.).

THE FITNESS FOR PURPOSE OF THIS STANDARD DRAWING FOR A SPECIFIC PROJECT SHALL BE ASSESSED AND ACCEPTED BY A SUITABLY QUALIFIED REGISTERED PROFESSIONAL ENGINEER OF QUEENSLAND (RPEQ).

BRISBANE CITY	BRISBANE CITY COUNCIL STANDARD DRAWING	PUBLISH DATE: Mar '21
		SCALE: NOT TO SCALE
	PRECAST KERB BLOCK	DRAWING NUMBER: BSD-2002
		ORIGINAL SIZE: A3 / REVISION: B

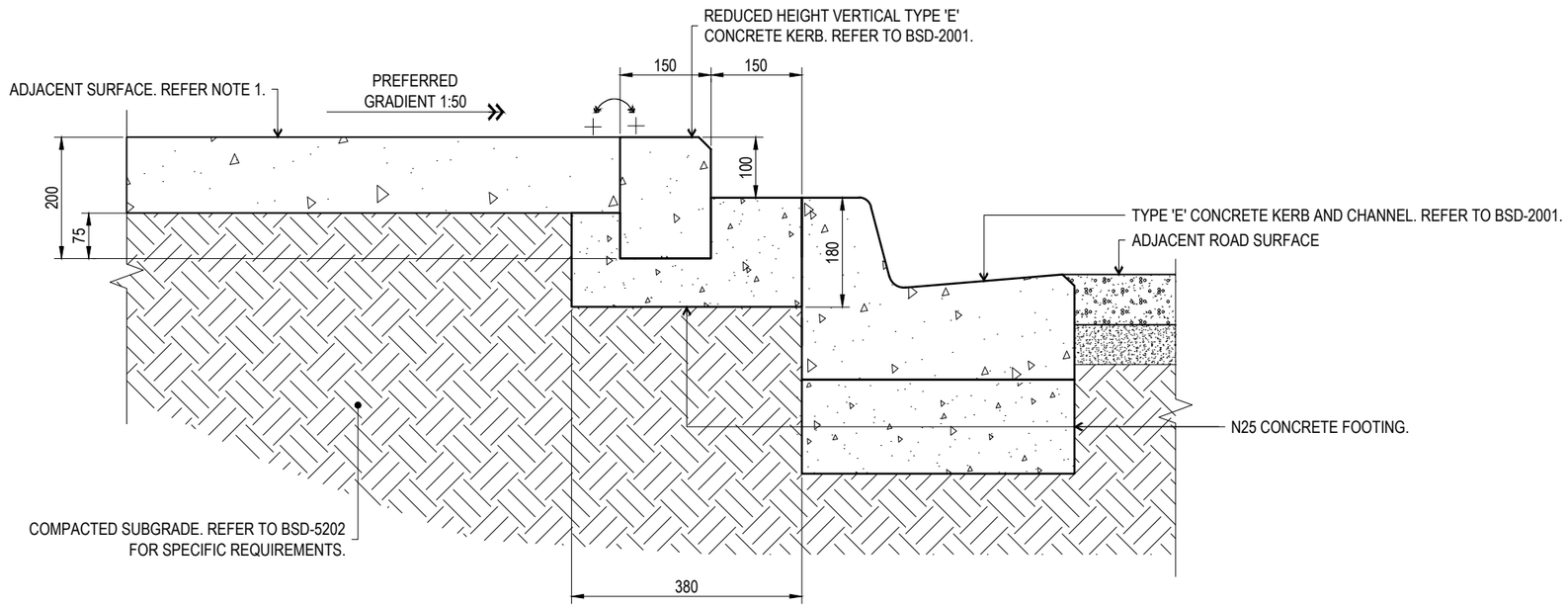

SECTION

GENERAL NOTES

1. REFER TO CHAPTER 3 AND CHAPTER 5 THE INFRASTRUCTURE DESIGN PLANNING POLICY (IDPSP) FOR REQUIRED FOOTPATH SURFACE FINISH.
2. REFER TO BSD-5202 FOR STANDARD CONCRETE FOOTPATH DETAILS AND SPECIFICATIONS.
3. REFER TO BSD-5214 FOR ASPHALT PATHWAY DETAILS AND SPECIFICATION.
4. DOUBLE KERB TO BE USED ONLY WHERE CROSSFALL FROM PROPERTY BOUNDARY TO STANDARD KERB IS GREATER THAN 1:40. APPROVAL FROM BRISBANE CITY COUNCIL TO BE OBTAINED PRIOR TO INSTALLATION.
5. ALL DIMENSIONS IN MILLIMETERS (U.N.O.).

BRISBANE CITY

BRISBANE CITY COUNCIL STANDARD DRAWING

DOUBLE KERB
ASPHALT FOOTPATH ONLY

PUBLISH DATE	SEP 2024
SCALE	NOT TO SCALE
DRAWING NUMBER	BSD-2003
ORIGINAL SIZE	A3
REVISION	D

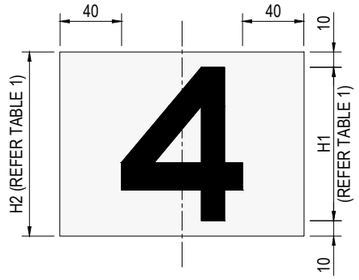

ONE NUMBER

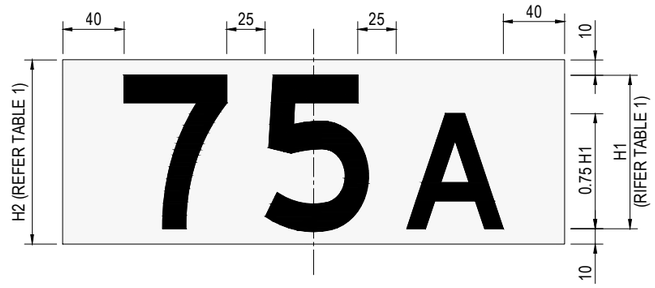

ALPHABETICAL SUFFIX

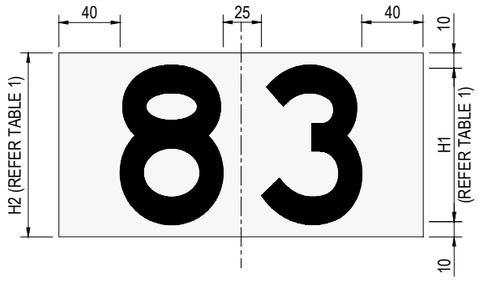

TWO NUMBERS

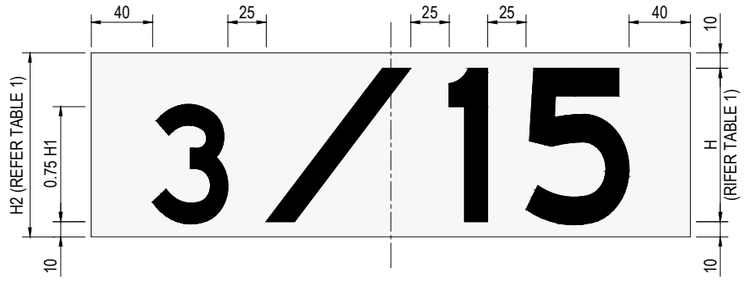

NUMBER PREFIX

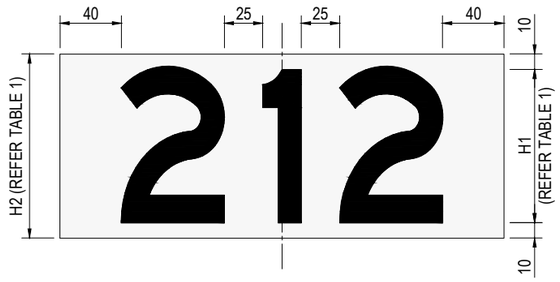

THREE NUMBERS

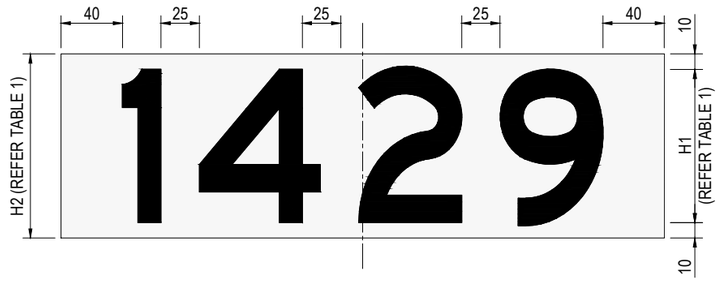

FOUR NUMBERS

NOTES:

1. KERBSIDE HOUSE NUMBERS ARE TO BE INSTALLED ON THE KERB ON THE APPROACH SIDE IF THE DRIVEWAY, OR WHERE NO DRIVEWAY EXISTS, AT THE CENTRE OF THE PROPERTY FRONTAGE (AT THE CENTRE OF THE PROJECTION OF THE LOT BOUNDARIES).
2. REFER TABLE 1 FOR KERBSIDE HOUSE NUMBERS HEIGHT.
3. FONT TO COMPLY WITH SERIES 'D' AS PER *AS1744*
4. ALL NUMBERS AND LETTERS ARE TO APPEAR UPRIGHT WHEN VIEWED F ROM THE ROAD.
5. THE BACKGROUND IS TO BE RECTANGULAR, AND MUST NOT EXTEND MORE THAN 40mm FROM THE OUTER EDGE OF THE NUMBER OR LETTER.
6. NUMBERS ARE TO BE LOCATED CENTRALLY WITHIN THE BACKGROUND.
7. WHERE A NUMBER PREFIX OR ALPHABETICAL SUFFIX IS REQUIRED (FOR EXAMPLE, 2/36, 24A), THE PREFIX OR SUFFIX MUST BE THREE-QUARTER THE HEIGHT OF THE MAIN NUMBER.
8. ALL ALPHABETICAL CHARACTERS MUST BE CAPITALS.
9. MATERIALS: WATERBORNE ROAD MARKING PAINT IN ACCORDANCE WITH *AS4095.3* OR OTHER SUITABLE ROAD MARKING MATERIAL. LUMINESCENT MATERIAL IS PREFERRED.
10. MAINTENANCE AND RESPONSIBILITY:
    - MAINTENANCE OF THE KERB NUMBER IS THE SOLE RESPONSIBILITY OF THE PROPERTY OWNER.
    - THE PROPERTY OWNER SHALL ENSURE THE CORRECT HOUSE NUMBER IS MARKED ON THE KERB.
12. ALL DIMENSIONS IN MILLIMETRES (U.N.O.).

TABLE 1: NUMBERING HEIGHT

NUMBERING LOCATION	NUMBERING HEIGHT					
	DESIRABLE		MINIMUM		MAXIMUM	
	H1	H2	H1	H2	H1	H2
KERB FACE	100	120	80	100	110	130
DRIVEWAY APRON/WING	110	130	100	120	110	130

LEGEND:

- ■ NUMBERS/LETTERS: BLACK TO N61 BLACK IN ACCORDANCE WITH *AS2700*.
- □ BACKGROUND: WHITE TO N11 PEARL GREY OR Y35 OFF WHITE IN ACCORDANCE WITH *AS2700*.

BRISBANE CITY

BRISBANE CITY COUNCIL STANDARD DRAWING

KERBSIDE HOUSE NUMBERING
NUMBER LAYOUTS
SHEET 1 OF 2

PUBLISH DATE	JUN 2023
SCALE	NOT TO SCALE
DRAWING NUMBER	BSD-2004
ORIGINAL SIZE	A3
REVISION	A

NOTES:

1. KERBSIDE HOUSE NUMBERS ARE TO BE INSTALLED ON THE KERB ON THE APPROACH SIDE IF THE DRIVEWAY, OR WHERE NO DRIVEWAY EXISTS, AT THE CENTRE OF THE PROPERTY FRONTAGE (AT THE CENTRE OF THE PROJECTION OF THE LOT BOUNDARIES).
2. KERBSIDE NUMBERING IS ONLY ALLOWED IN LOCATIONS WHERE THERE IS CONTINUOUS CONCRETE KERB.
3. IN LOCATIONS WHERE THE KERB IS CONSTRUCTED OF STONE OR OTHER BLOCKS, OR IS NOT A STANDARD KERB PROFILE, APPROVAL TO EMPLOY KERBSIDE NUMBERING MUST BE OBTAINED FROM COUNCIL. COUNCIL WILL TAKE INTO ACCOUNT THE AESTHETIC IMPACT OF KERBSIDE NUMBERING ON THE HERITAGE SIGNIFICANCE OF THE AREA.
4. NUMBERS MUST BE PLACED ON THE VERTICAL, OR NEAREST-TO-VERTICAL FACE OF THE KERB, IN A POSITION TO INDICATE THE PROPERTY CONCERNED OR THE DRIVEWAY LEADING TO THAT PROPERTY.
5. NUMBERS ARE TO BE LOCATED ADJACENT TO THE DRIVEWAY ON THE SIDE NEAREST TO THE MIDDLE OF THE PROPERTY FRONTAGE.
6. WHERE DEMAND FOR ON-STREET PARKING IS HIGH, KERBSIDE NUMBERING MAY BE POSITIONED ON THE DRIVEWAY APRON OR WING NEAREST TO THE MIDDLE OF THE PROPERTY FRONTAGE SO AS NOT TO BE OBSCURED BY LAWFULLY PARKED VEHICLES.
7. WHERE THE KERB FACE IS TOO SMALL INSTALL THE MINIMUM HEIGHT NUMBERING, MARKING THE NUMBER ON THE DRIVEWAY APRON OR WING IS ACCEPTABLE.
8. ALL DIMENSIONS IN MILLIMETRES (U.N.O.).

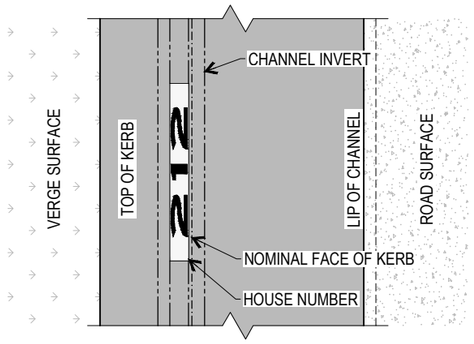

PLAN VIEW

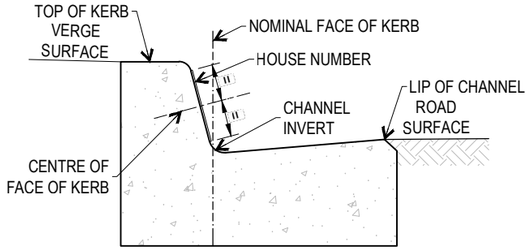

PROFILE VIEW

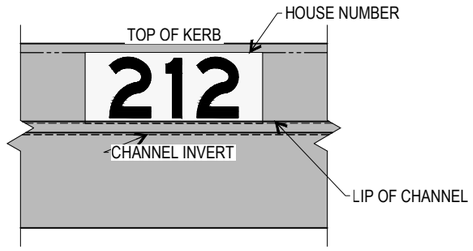

FRONT VIEW

TYPE 'E' OR BARRIER TYPE KERB AND CHANNEL

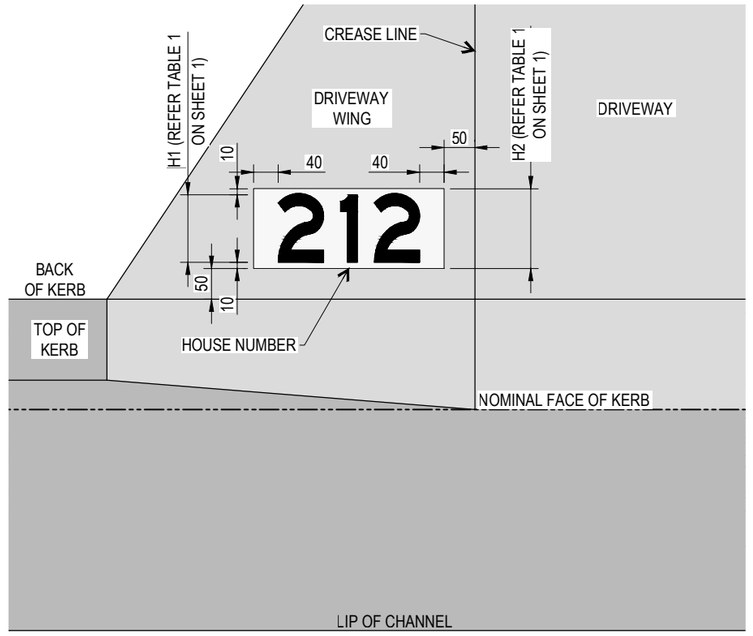

DRIVEWAY APRON/WING

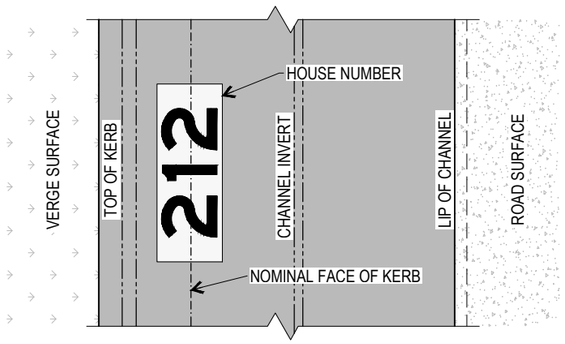

PLAN VIEW

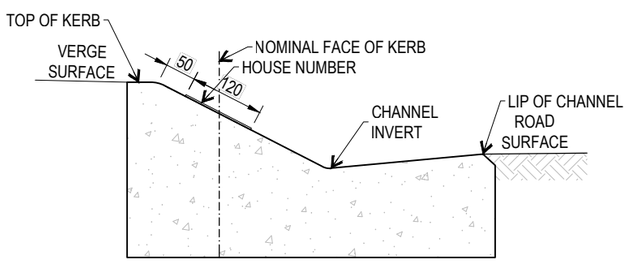

PROFILE VIEW

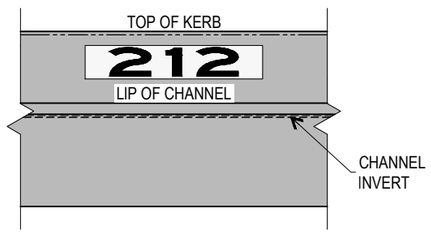

FRONT VIEW

TYPE 'D' OR LAYBACK TYPE KERB AND CHANNEL

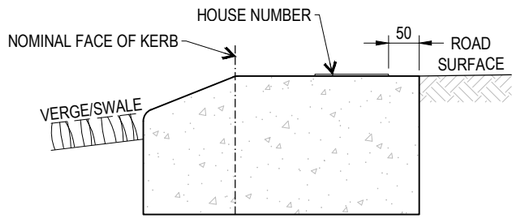

PROFILE VIEW

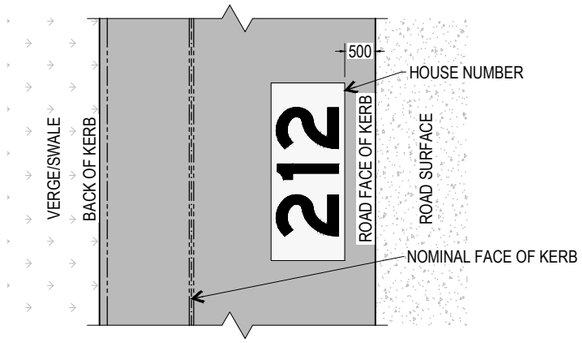

PLAN VIEW

TYPE 'G' KERB AND CHANNEL OR EDGE STRIP

THE PURPOSE OF THIS STANDARD DRAWING IS TO PROVIDE TYPICAL DETAILS THAT SUPPORT THE DESIRED OUTCOMES OF THE BRISBANE CITY PLAN 2014 AND ASSOCIATED PLANNING SCHEME POLICIES. THE FITNESS FOR PURPOSE OF THIS STANDARD DRAWING FOR A SPECIFIC PROJECT SHOULD BE ASSESSED AND ACCEPTED BY AN APPROPRIATELY QUALIFIED DESIGNER AND/OR REGISTERED PROFESSIONAL ENGINEER OF QUEENSLAND (RPEQ).

BRISBANE CITY

BRISBANE CITY COUNCIL STANDARD DRAWING

KERBSIDE HOUSE NUMBERING
INSTALLATION LAYOUTS
SHEET 2 OF 2

PUBLISH DATE	JUN 2023
SCALE	NOT TO SCALE
DRAWING NUMBER	BSD-2004
ORIGINAL SIZE	A3
REVISION	A

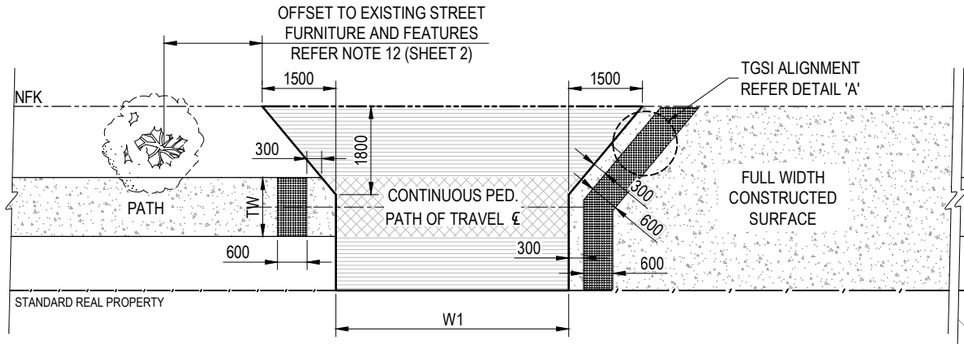

TYPE A,B1

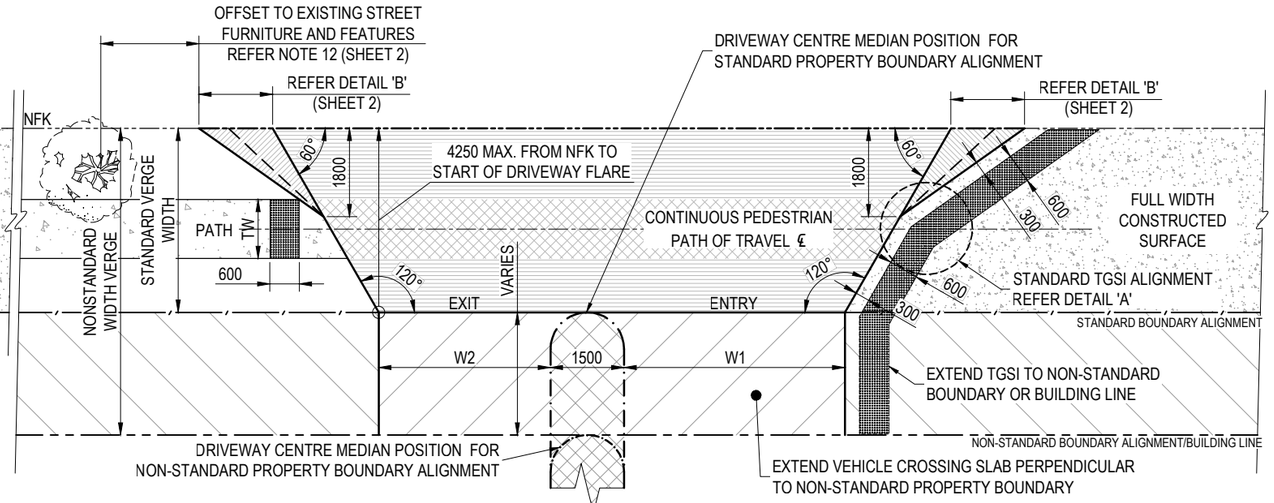

TYPE C1,C2,C3,C4

TYPE 1 CENTRE ISLAND

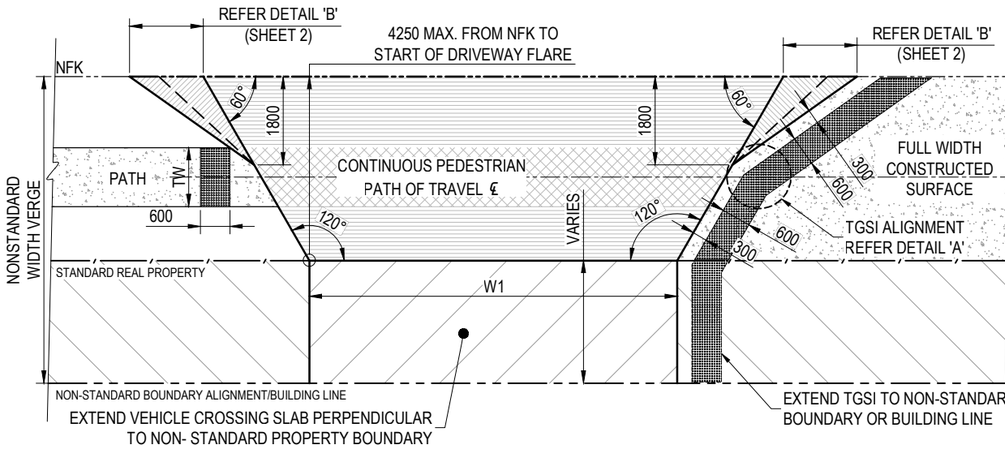

TYPE B2

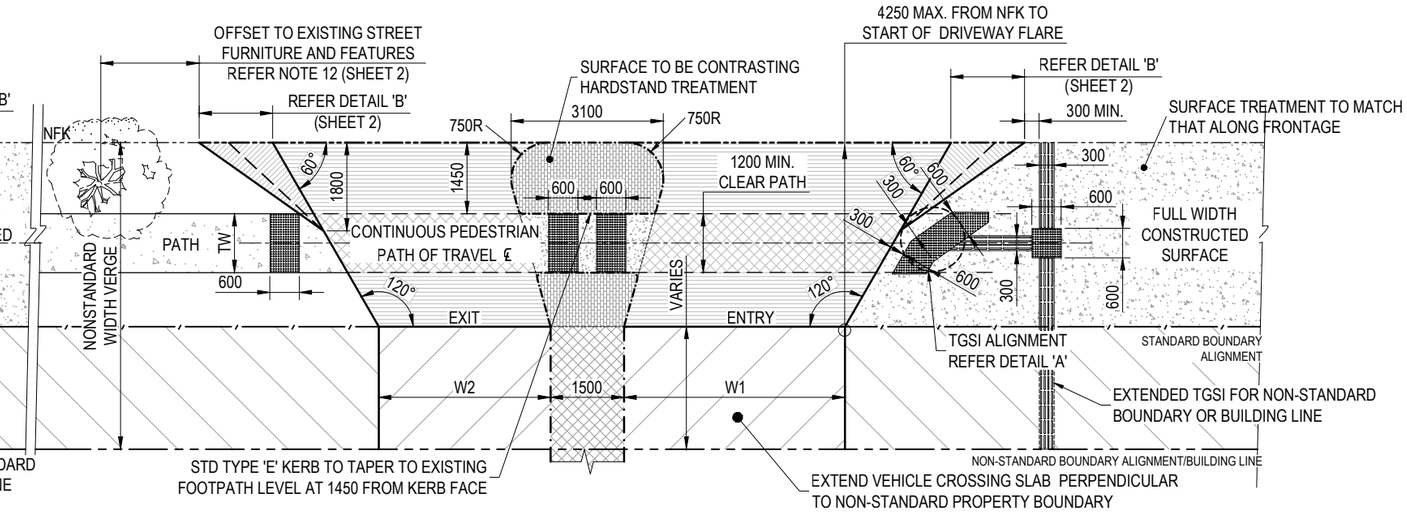

TYPE C1,C2,C3,C4

TYPE 2 CENTRE ISLAND

(LEFT IN / LEFT OUT ONLY)

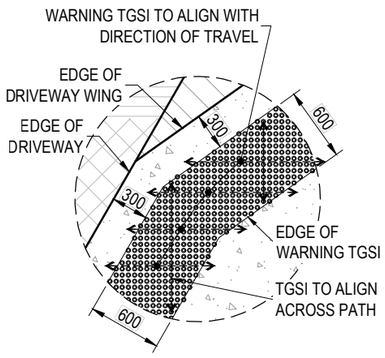

DETAIL 'A'

STANDARD TGSI ALIGNMENT

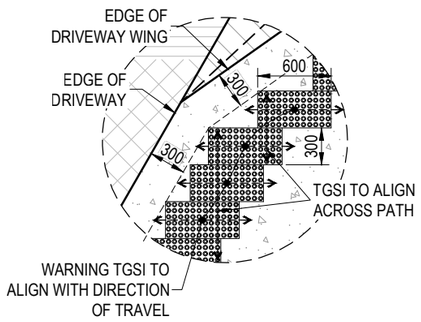

DETAIL 'B'

ALTERNATIVE TGSI ALIGNMENT

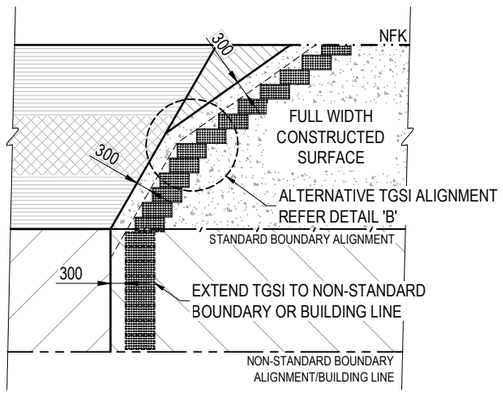

INSERT 1

ALTERNATIVE TGSI INSTALLATION

LEGEND

- WARNING TACTILE GROUND SURFACE INDICATORS (TGSI). REFER TO NOTE 14 (SHEET 2).
- DIRECTIONAL TACTILE GROUND SURFACE INDICATORS (TGSI). REFER TO NOTE 14 (SHEET 2).
- NFK NOMINAL FACE OF KERB
- TW WIDTH OF TGSI TO MATCH PATH WIDTH

BRISBANE CITY

BRISBANE CITY COUNCIL STANDARD DRAWING

VEHICLE CROSSING (DRIVEWAY) - OTHER THAN SINGLE DWELLING AND REAR ALLOTMENT ACCESS - DETAILS - SHEET 1 OF 2

PUBLISH DATE	JUN 2023
SCALE	NOT TO SCALE
DRAWING NUMBER	BSD-2021
ORIGINAL SIZE A3	REVISION F

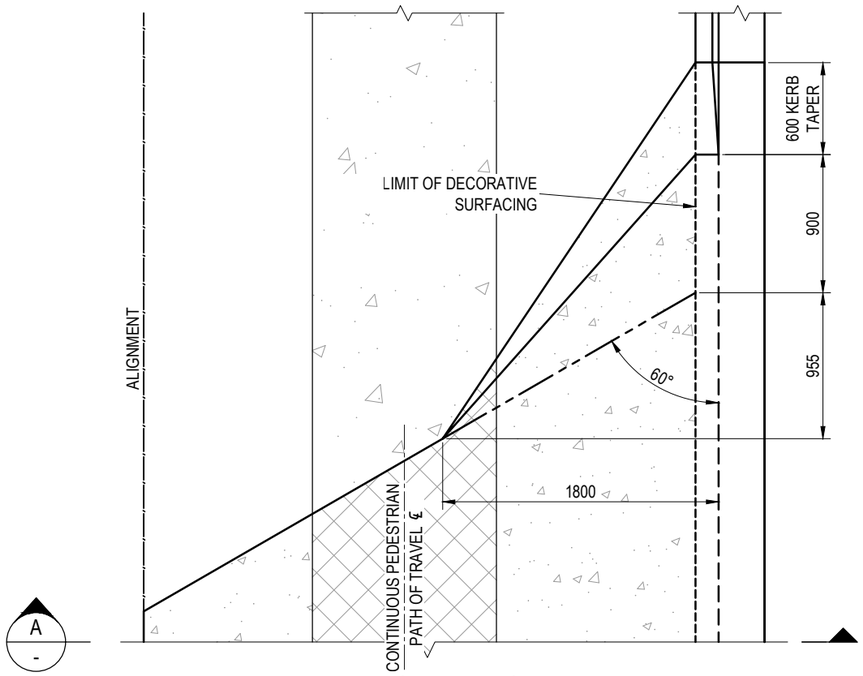

DETAIL 'B'

KERB TAPER TREATMENT

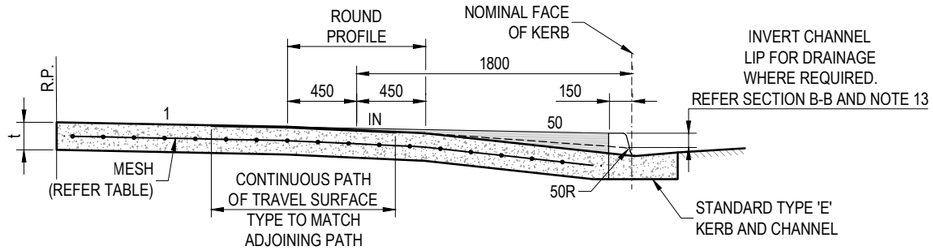

SECTION A-A

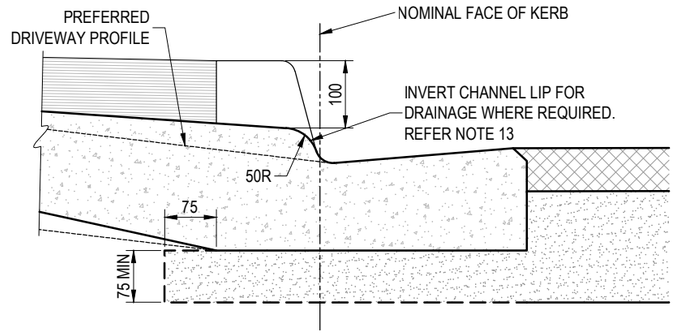

SECTION B-B
(FOR TYPE 'E' K&C)

(INVERT LIP DETAIL - WHERE REQUIRED)

NON-RESIDENTIAL VEHICLE CROSSING DETAILS

TYPE^	W1 (m) ENTRY	W2 (m) EXIT	t (mm)	REINFORCING MESH
A	3.5-6.0	-	130	SL82
B1	6.0-7.0	-	180	SL92
B2	6.0-9.0	-	180	SL92
C1	4.5	3.5	180	SL92
C2	5.5	5.0	180	SL92
C3	7.5	6.0	180	SL92
C4	9.0	7.5	180	SL92

TABLE NOTES:

^ FOR NON-RESIDENTIAL VEHICLE CROSSINGS: REFER TO TRANSPORT, ACCESS, PARKING AND SERVICING PLANNING SCHEME POLICY FOR DETAIL.

* FOR REAR RESIDENTIAL AND RESIDENTIAL GROUP TITLE LOTS: WHERE APPROVED BY COUNCIL, THE ALTERNATIVE ASPHALT PAVEMENT FOR RESIDENTIAL ACCESS MAY BE PERMITTED IN NON-URBAN AREAS UNDER ONE OR MORE OF THE FOLLOWING CIRCUMSTANCES:

- THE CONCRETE CONSTRUCTION IS VISUALLY INTRUSIVE.
- COST OF CONCRETE CONSTRUCTION IS PROHIBITIVE FOR THE LENGTH OF DRIVEWAY UNDER CONSIDERATION.

NOTES:

1. THE SPECIFIED PAVEMENT STANDARD DOES NOT APPLY TO POOR SUBGRADE. REFER SUPPLEMENTARY NOTES (BSD-0019) FOR DETAIL.
2. ALL CONCRETE TO BE GRADE N32.
3. REINFORCEMENT AS PER TABLE, MIN. LAP 210MIN, MIN. CLEAR TOP COVER 50mm.
4. ALL CONCRETE TO BE BROOM FINISHED FOR SLIP RESISTANCE REQUIREMENTS REFER REFERENCE SPECIFICATION FOR ENGINEERING WORKS S200 CONCRETE WORK.
5. THE THICKNESS OF DECORATIVE SURFACING WHERE APPROVED IS ADDITIONAL TO THE CONCRETE THICKNESS SPECIFIED.
6. ALL EXISTING ASPHALT OR CONCRETE PAVEMENTS TO BE SAW CUT PRIOR TO ALLOW FOR NEAT REMOVAL AND REINSTATEMENT.
7. ROADWAY MATERIAL EXCAVATED ALONG THE FRONT OF THE CROSSING MUST BE REINSTATED TO ORIGINAL PAVEMENT STANDARD - ADDITIONALLY, A BASE 75 THICK DRAINAGE LAYER CONNECTED TO THE SIDE DRAIN IS REQUIRED.
8. PERMITS RELATING TO ROADS AND FOOTPATH MUST BE OBTAINED FROM COUNCIL (EITHER FROM REGIONAL BUSINESS CENTRES OR www.brisbane.qld.gov.au) SPECIFYING CROSSING TYPE, LOCATION, LEVELS AND DIMENSIONS PRIOR TO ANY EXCAVATION.
9. TGSI AT DRIVEWAY CROSSING POINT TO BE INSTALLED SO AS TO ALIGN USERS ON CONTINUOUS PATH OF TRAVEL AND TO BSD-5218.
10. MAX. CROSSFALL ON VERGE/PATH SHOULD NOT BE EXCEEDED.
11. CLEAR PATH WIDTH TO BE MAINTAINED ACROSS DRIVEWAY.
12. OFFSETS TO EXISTING STREET FURNITURE AND FEATURES SUCH AS STREET TREES, STORMWATER GULLIES, ELECTRICITY INFRASTRUCTURE AND TRAFFIC SIGNS AS PER BSD-2022.
13. INVERT CHANNEL LIP ONLY TO BE PROVIDED ON BOTH TYPE 'D' AND TYPE 'E' KERB AND CHANNEL TYPES TO PREVENT WATER FLOW INGRESS ON FLAT OR NEGATIVE VERGE CROSSFALLS. LIP TO BE 100mm FROM TOP OF KERB.
14. TGSI TYPE, COLOUR AND INSTALLATION AS PER BSD-5218. TGSI TO COMPLY WITH *AS1428.4.1.*
15. DESIGN STANDARDS FOR CROSSINGS SUCH AS LOCATION (DISTANCE FROM INTERSECTIONS AND TRAFFIC MANAGEMENT DEVICES) AND SITE DISTANCE REQUIREMENTS AS PER THE TRANSPORT, ACCESS, PARKING AND SERVICING PLANNING SCHEME POLICY.
16. MAINTENANCE OF VEHICLE CROSSINGS (DRIVEWAYS) IS THE RESPONSIBILITY OF THE PROPERTY OWNER.
17. REDUNDANT VEHICLE CROSSINGS (DRIVEWAYS) ARE TO BE COMPLETELY REMOVED AND THE ADJACENT KERB AND CHANNEL AND VERGE IS TO REINSTATED TO MATCH EXISTING.
18. WIDTH AND MATERIALS FOR ACCESS REQUIREMENTS TO REAR RESIDENTIAL LOTS AND RESIDENTIAL GROUP TITLE LOTS AS PER THE TRANSPORT, ACCESS, PARKING AND SERVICING PLANNING SCHEME POLICY
19. TO REFLECT PEDESTRIAN PRIORITY OVER VEHICLES, THE ADJOINING PATH SURFACE IS TO EXTEND ACROSS THE DRIVEWAY/VEHICLE CROSSOVER, EXCEPT WHERE PATH SURFACE IS ASPHALT OR SEGMENTAL/DECORATIVE PAVERS IN WHICH CASE THE DRIVEWAY AND VEHICLE CROSSOVER MUST BE CONSTRUCTED OF CONCRETE.
20. DIMENSIONS IN MILLIMETRES (U.N.O.).

BRISBANE CITY

BRISBANE CITY COUNCIL STANDARD DRAWING

VEHICLE CROSSING (DRIVEWAY) - OTHER THAN SINGLE DWELLING AND REAR ALLOTMENT ACCESS - NOTES & SECTIONS - SHEET 2 OF 2

PUBLISH DATE	JUN 2023
SCALE	NOT TO SCALE
DRAWING NUMBER	BSD-2021
ORIGINAL SIZE	A3
REVISION	G

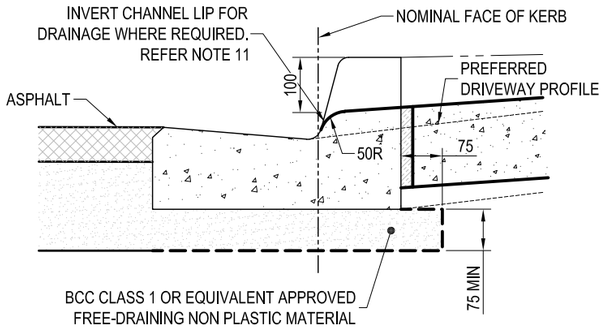

SECTION A-A (FOR TYPE 'E' K&C)

(INVERT LIP DETAIL - WHERE REQUIRED)

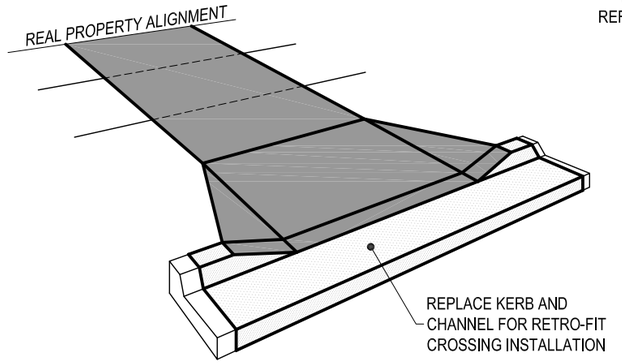

PERSPECTIVE VIEW

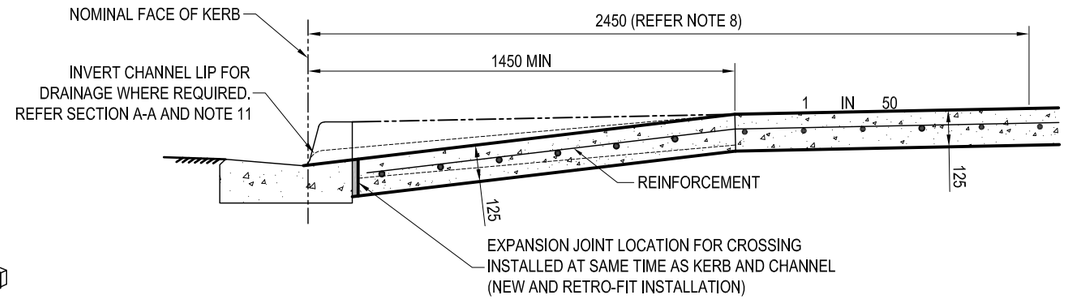

SECTION A-A (WITH TYPE 'E' K&C)

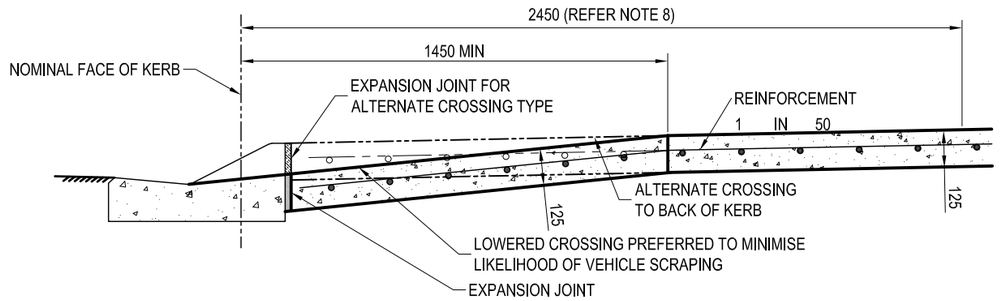

SECTION A-A (WITH TYPE 'D' K&C)

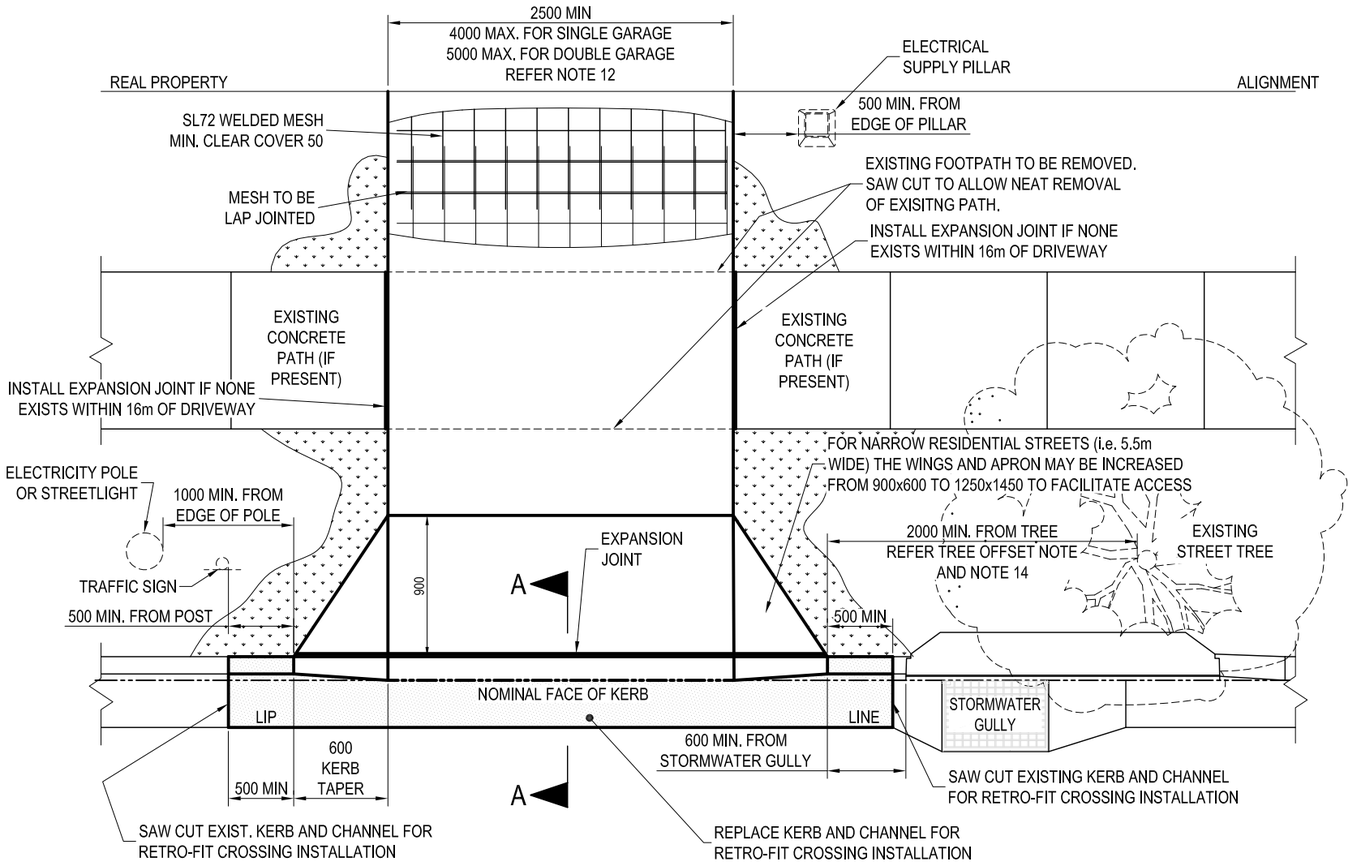

PLAN

NOTES:

1. THE SPECIFIED PAVEMENT STANDARD DOES NOT APPLY TO POOR SUBGRADE. REFER SUPPLEMENTARY NOTES FOR DETAIL (REFER BSD-0015 FOR REQUIREMENTS).
2. THIS CROSSING IS NOT FOR COMMERCIAL VEHICLES.
3. ALL CONCRETE TO BE GRADE N32.
4. ALL CONCRETE TO BE BROOM FINISHED. FOR SLIP RESISTANCE REQUIREMENTS REFER SPECIFICATION S150 ROADWORKS.
5. EXPANSION JOINTS TO BE FULL DEPTH 10 THICK CLOSED CELL CROSS LINKED POLYETHYLENE FOAM (85-150kg/m3). SEAL SURFACE OF JOINT WITH A SUITABLE POLYURETHANE SEALANT.
6. THE THICKNESS OF DECORATIVE SURFACING WHERE APPROVED IS ADDITIONAL TO THE THICKNESS SHOWN.
7. PERMITS RELATING TO ROADS AND DRAINAGE MUST BE OBTAINED FROM COUNCIL (EITHER FROM REGIONAL BUSINESS CENTRES OR www.brisbane.qld.gov.au) TO SEEK APPROVAL OF LOCATION AND LEVELS PRIOR TO ANY EXCAVATION.
8. A 1:50 SLOPE UPWARDS FROM THE TOP OF KERB FOR A MIN DISTANCE OF 2450mm IS NECESSARY TO PROTECT PROPERTIES FROM STORMWATER OVERFLOW FROM THE ROAD PAVEMENT. THIS CONSTRAINT MAY BE VARIED WITH THE APPROVAL FROM COUNCIL.
9. WHEN CROSSING IS RETRO-FITTED TO EXISTING KERB AND CHANNEL, THE EXISTING KERB AND CHANNEL IS TO BE REMOVED USING A SAW CUT AND NEW KERB AND CHANNEL CONSTRUCTED AS PART OF NEW CROSSING. REFER BSD-2001 FOR STANDARD KERB PROFILES.
10. FOR RETRO-FITTED CROSSINGS EXISTING ROAD PAVEMENT TO BE SAW CUT TO ALLOW CLEAN REMOVAL OF EXISTING KERB AND CHANNEL. REINSTATE ROAD PAVEMENT AFTER CONSTRUCTION OF NEW CROSSING.
11. INVERT CHANNEL LIP ONLY TO BE PROVIDED ON BOTH TYPE 'D' AND TYPE 'E' KERB AND CHANNEL TYPES TO PREVENT WATER FLOW INGRESS ON FLAT OR NEGATIVE VERGE CROSSFALLS. LIP TO BE 100mm FROM TOP OF KERB.
12. NARROW LOT FRONTAGE CROSSOVER MAXIMUM WIDTHS
    - FRONTAGE ≥7.5m BUT <10m: 4.0m;
    - FRONTAGE <7.5m: 3.5m.
13. ON MINOR ROADS CROSSOVER TO BE A MINIMUM:
    - 10m FROM A MINOR INTERSECTION;
    - 20m FROM A MAJOR INTERSECTION.
14. 'TREE OF CYLINDRICAL FORM' IS A TREE WITH A ROUND STEM WITH NO ADJOINING TREE ROOTS ABOVE THE GROUND SURFACE. 'BUTTRESS TREES' ARE TREES WITH A ROUND STEM WITH ABOVE GROUND BUTTRESSED ROOTS (i.e. LARGE, WIDE ROOTS ON ALL SIDES OF A SHALLOWLY ROOTED TREE). TREE SPECIES WITH BUTTRESSED ROOTS INCLUDE FIG TREES AND POINCIANAS.
15. DIMENSIONS IN MILLIMETRES (U.N.O.).

LEGEND:

AREA TO BE TURFED

TREE OFFSET NOTE (REFER NOTE 14)

- 2000 MIN. FROM TRUNK OF 'TREE OF CYLINDRICAL FORM'.
- BUTTRESS TREES REQUIRE A GREATER CLEARANCE TO DRIVEWAYS. APPLICANTS MUST SUBMIT A VEHICLE CROSSING/DRIVEWAY PROPOSAL PLAN TO COUNCIL SHOWING ADEQUATE CLEARANCE TO BUTTRESSED ROOTS TO THE SATISFACTION OF SUITABLY QUALIFIED ARBORIST OR COUNCIL DELEGATE.

BRISBANE CITY

BRISBANE CITY COUNCIL STANDARD DRAWING

VEHICLE CROSSING (DRIVEWAY) - SINGLE DWELLING

PUBLISH DATE	NOV 2019
SCALE	NOT TO SCALE
DRAWING NUMBER	BSD-2022
ORIGINAL SIZE	A3
REVISION	E

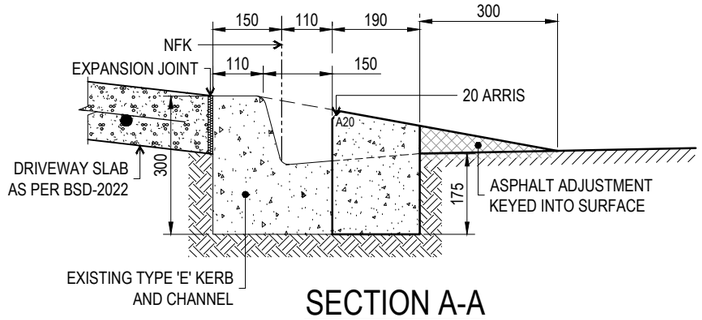

SECTION A-A

STANDARD TYPE 'E' KERB & CHANNEL EXAMPLE

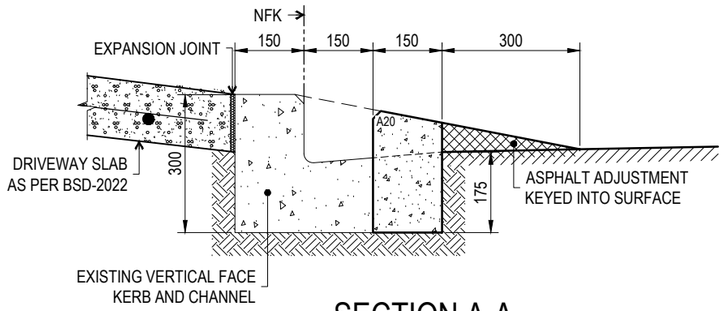

SECTION A-A

VERTICAL FACE, 300 CHANNEL KERB & CHANNEL EXAMPLE

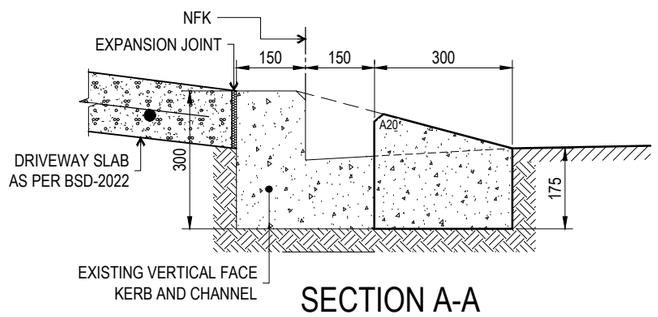

SECTION A-A

VERTICAL FACE, 450 CHANNEL KERB & CHANNEL EXAMPLE

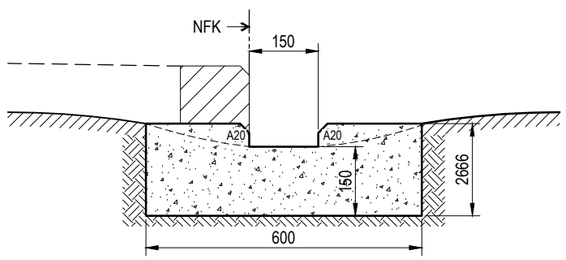

INVERT MODIFICATION SECTION

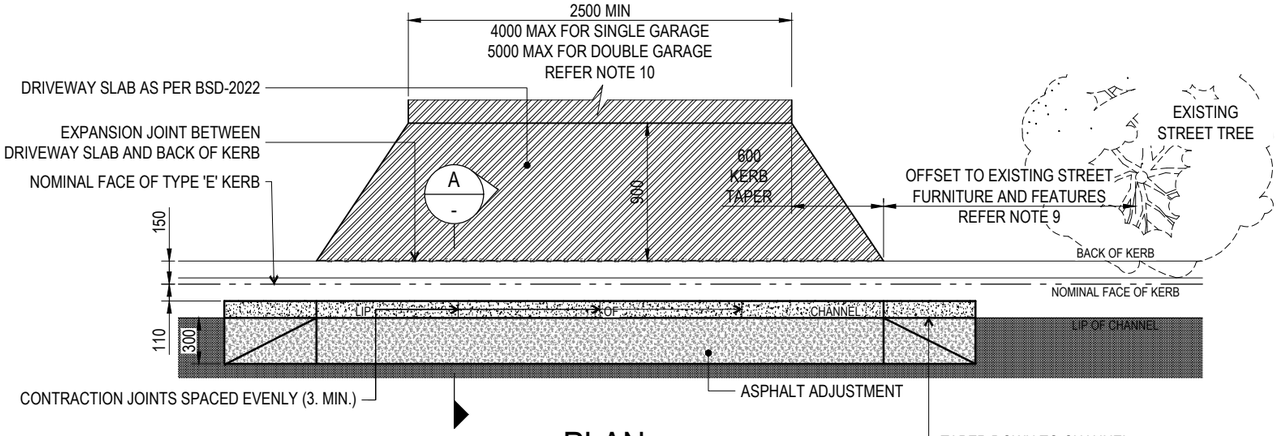

PLAN

FOR STANDARD TYPE 'E' KERB AND CHANNEL

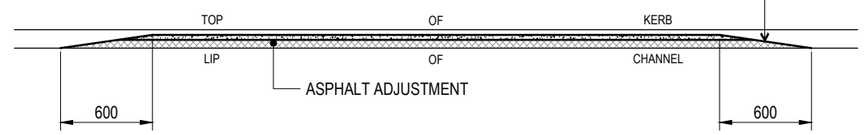

ELEVATION

FOR STANDARD TYPE 'E' KERB AND CHANNEL

NOTES:

1. THIS VEHICLE CROSSING TYPE IS ONLY TO BE APPLIED TO AREAS WITH AN ESTABLISHED ROAD NETWORK. IT NOT APPROVED FOR USE IN NEW SUBDIVISIONS.
2. GRID CROSSINGS SHALL NOT BE USED WHERE A STANDARD VEHICLE INVERT CROSSING WILL SUFFICE, AS PER BSD-2022.
3. APPLICABLE FOR LOCAL ROADS IN LIEU OF FULL KERB AND CHANNEL RECONSTRUCTION.
4. GRID CROSSINGS SHALL NOT BE USED ON NEIGHBOURHOOD ROADS AND ABOVE WITHOUT PRIOR APPROVAL OF COUNCIL, IN WHICH CASE FULL RECONSTRUCTION OF THE KERB, CHANNEL,INVERT AND ADJACENT ROAD PAVEMENT AND SURFACE WILL BE REQUIRED.
5. GRID GAP TO BE 150 WIDE.
6. ALL CONCRETE TO BE GRADE N32.
7. ALL CONCRETE TO BE STEEL TROWEL FINISHED.
8. AFTER SECTIONS OF THE CONCRETE ARE REMOVED, THE REMAINING SURFACE SHALL BE SCABBLED TO A TOLERANCE OF ±10mm AND CLEANED PRIOR TO PLACING NEW CONCRETE.
9. OFFSETS TO EXISTING STREET FURNITURE AND FEATURES SUCH AS STREET TREES, STORMWATER GULLIES, ELECTRICITY INFRASTRUCTURE AND TRAFFIC SIGNS AS PER BSD-2022.
10. NARROW LOT FRONTAGE CROSSOVER MAXIMUM WIDTHS
    - FRONTAGE ≥7.5m BUT <10m: 4.0m;
    - FRONTAGE <7.5m: 3.5m.
11. ON MINOR ROADS CROSSOVER TO BE A MINIMUM:
    - 10m FROM A MINOR INTERSECTION;
    - 20m FROM A MAJOR INTERSECTION.
12. REFER BSD-2001 FOR KERB AND CHANNEL PROFILES.
13. MAINTENANCE OF VEHICLE CROSSINGS (DRIVEWAYS) IS THE RESPONSIBILITY OF THE PROPERTY OWNER.
14. REDUNDANT VEHICLE CROSSINGS (DRIVEWAYS) ARE TO BE COMPLETELY REMOVED AND THE ADJACENT KERB AND CHANNEL AND VERGE IS TO BE REINSTATED TO MATCH EXISTING.
15. TO REFLECT PEDESTRIAN PRIORITY OVER VEHICLES, THE ADJOINING PATH SURFACE IS TO EXTEND ACROSS THE DRIVEWAY/VEHICLE CROSSOVER, EXCEPT WHERE PATH SURFACE IS ASPHALT OR SEGMENTAL/DECORATIVE PAVERS IN WHICH CASE THE DRIVEWAY AND VEHICLE CROSSOVER MUST BE CONSTRUCTED OF CONCRETE.
16. DIMENSIONS IN MILLIMETRES (U.N.O.).

LEGEND

A20	20 ARRIS
NFK	NOMINAL FACE OF KERB

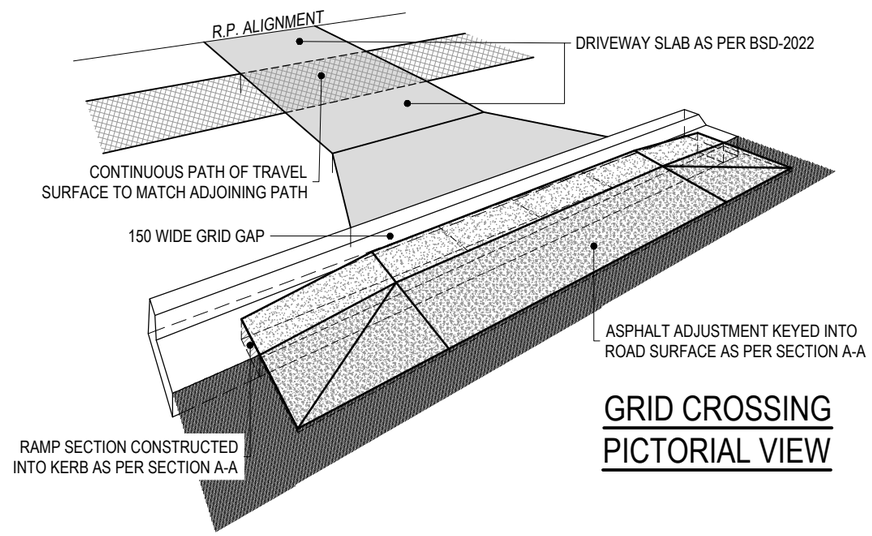

GRID CROSSING PICTORIAL VIEW

BRISBANE CITY

BRISBANE CITY COUNCIL STANDARD DRAWING

VEHICLE CROSSING (DRIVEWAY)
GRID CROSSING AND
INVERT MODIFICATION

PUBLISH DATE	SEP 2024
SCALE	NOT TO SCALE
DRAWING NUMBER	BSD-2023
ORIGINAL SIZE	A3
REVISION	F

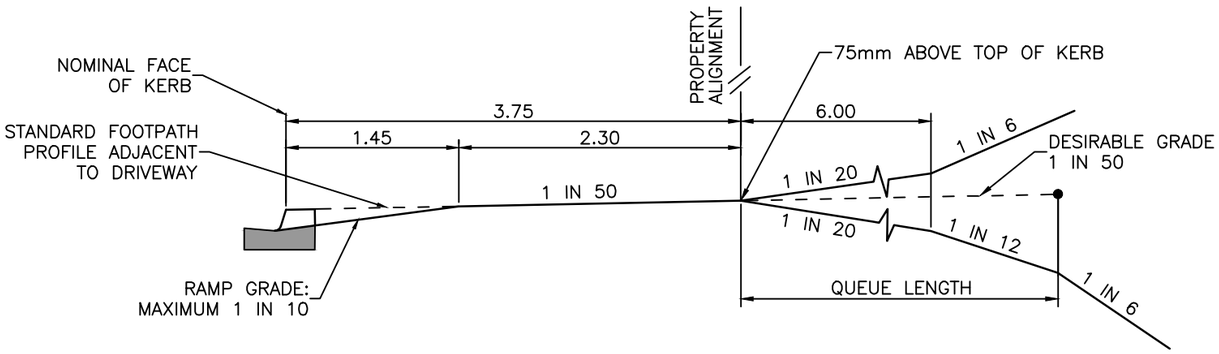

DESIRABLE GRADES

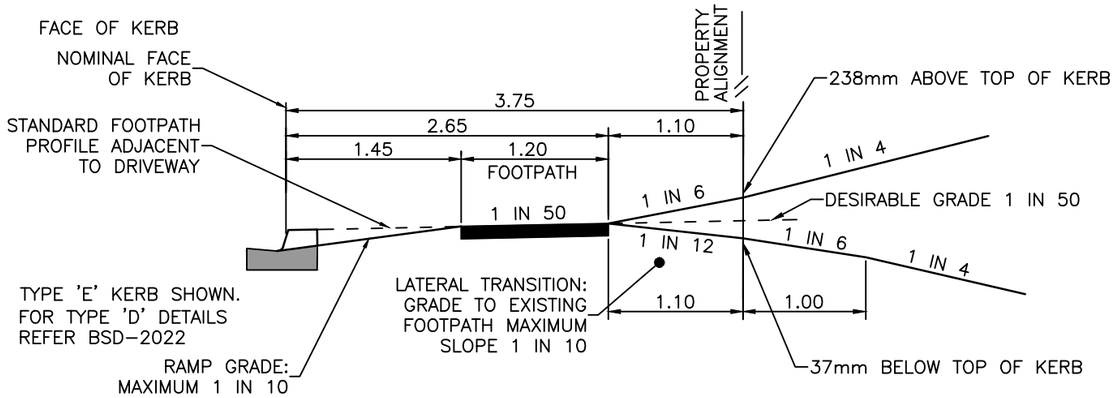

MAXIMUM GRADES

RESIDENTIAL VEHICULAR ENTRANCE

(SINGLE DWELLING)

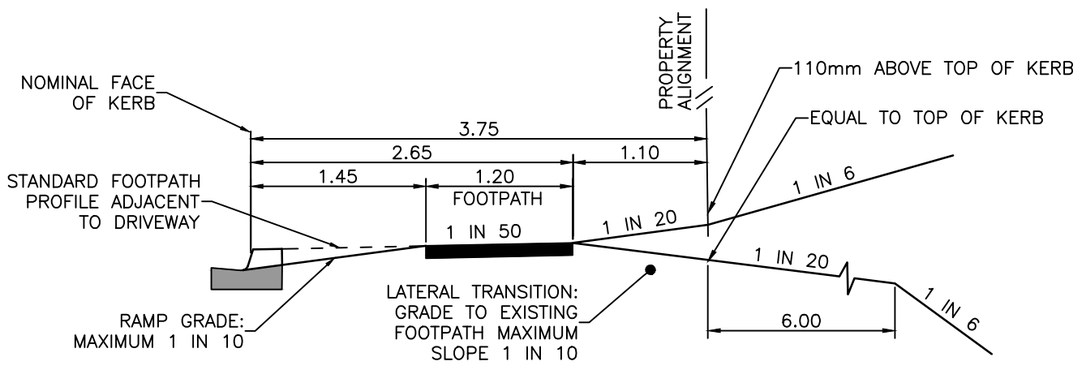

MAXIMUM GRADES

NON-RESIDENTIAL VEHICULAR ENTRANCES & RESIDENTIAL (OTHER THAN SINGLE DWELLING)

NOTES:

1. ALTERNATIVE GRADES MAY BE ADOPTED TO SUIT SPECIFIC SITUATIONS AND TYPES OF VEHICLES AS SPECIFIED IN THE "TRANSPORT, ACCESS, PARKING AND SERVICING PLANNING SCHEME POLICY" OF BRISBANE CITY PLAN.
2. ROUNDING MAY BE REQUIRED WHERE CHANGE IN PROFILES EXCEED 5%. REFER TO BRISBANE CITY PLAN. GENERALLY A ROUNDING APPROXIMATING TO THE AVERAGE SLOPE OVER 6.4m IS SUITABLE.
3. WHEN FOOTPATH WIDTH EXCEEDS 3.75m BUT IS LESS THAN 4.25m WIDE THE DESIRABLE POSITION OF STRIP FOOTPATH IS 1.1m FROM PROPERTY ALIGNMENT.
4. THE NEED FOR A FLAT APPROACH GRADE (EG. QUEUE LENGTH) FROM THE PRIVATE PROPERTY TO THE FOOTPATH IS DEPENDENT ON CARPARK CAPACITY AND TURNOVER RATES. THE HIGHER THE CAPACITY AND EXPECTED TURNOVER RATES, THE MORE CRITICAL ARE THESE REQUIREMENTS. REFER "TRANSPORT, ACCESS, PARKING AND SERVICING PLANNING SCHEME POLICY" OF BRISBANE CITY PLAN.
5. THE LAYOUTS OF DRIVEWAYS ARE DETAILED IN STANDARD DRAWINGS BSD-2021 & BSD-2022.
6. DIMENSIONS IN METRES (U.N.O.).

ISSUE	AMENDMENT	DRAWN DATE	CHK'D DATE	APPR'D DATE
C	Cross-section Altered to Preferred Std	MAY '17	MAY '17	MAY '17
B	DRawing Title Amended	JAN '16	JUL 16	JUL '16
A	Drawing Converted from UMS Series April 2014	APR '14	APR '14	APR '14

DRAWING AUTHORISED FOR PUBLICATION
B.BALL SIGNATURE ON ORIGINAL
DATED 29/6/01 R.P.E.Q: 3852
ASSET ENGINEERING MANAGER
STRATEGIC ASSET MANAGEMENT

DESIGN APPROVED
B.HANSON SIGNATURE ON ORIGINAL
DATED 27/6/01
PRINCIPAL ASSET OFFICER
ROADS & DRAINAGE

DESIGN	Std Dwgs WG	DATE	April '01
DRAWN	CPO - P&D	DATE	April '01
CHECKED	M.STEER	DATE	May '01
DRAWING FILENAME	BSD-2024 (B) Vehicle crossing (driveway) - Grades (3.72m wide footpath).dwg		
ASSOCIATED PLANS	SUPERSEDES UMS-224		

BRISBANE CITY

BRISBANE CITY COUNCIL STANDARD DRAWING

VEHICLE CROSSING (DRIVEWAY) GRADES (3.75m WIDE FOOTPATH)

SCALE: NOT TO SCALE
DWG No.: **BSD-2024**
ORIGINAL SIZE: A3
REVISION: C

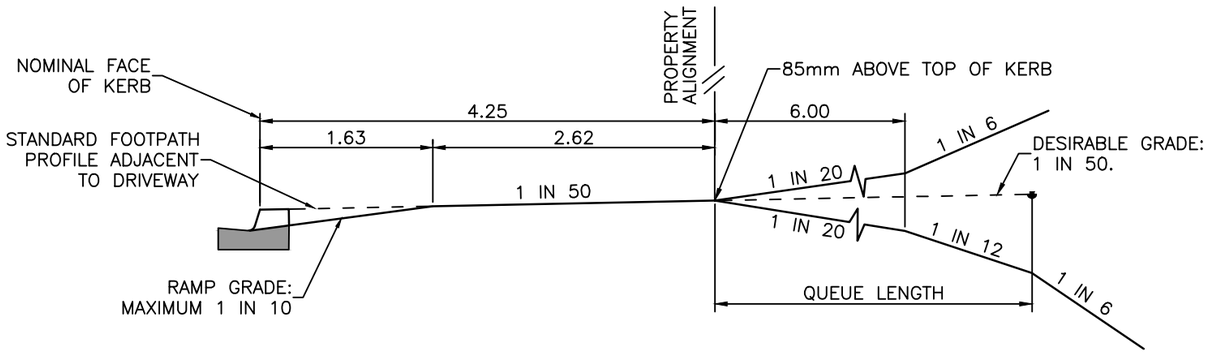

DESIRABLE GRADES

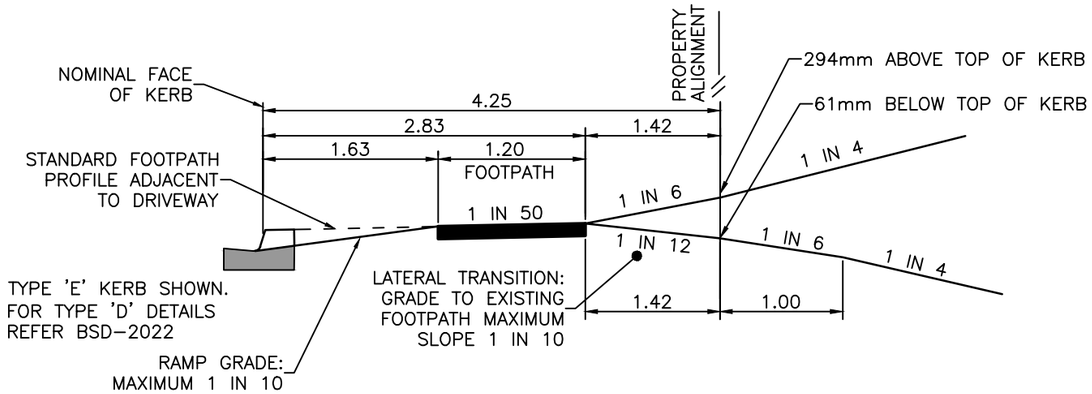

MAXIMUM GRADES
RESIDENTIAL VEHICULAR ENTRANCE
(SINGLE DWELLING)

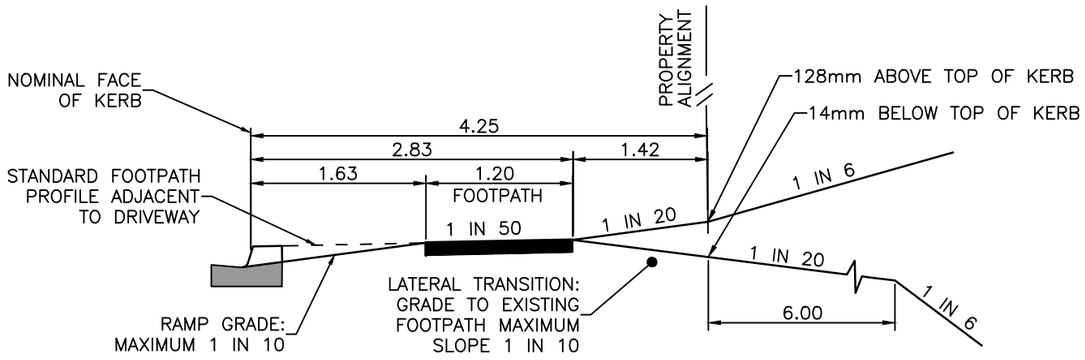

MAXIMUM GRADES
NON-RESIDENTIAL VEHICULAR ENTRANCES & RESIDENTIAL (OTHER THAN SINGLE DWELLING)

NOTES:

1. ALTERNATIVE GRADES MAY BE ADOPTED TO SUIT SPECIFIC SITUATIONS AND TYPES OF VEHICLES AS SPECIFIED IN THE "TRANSPORT, ACCESS, PARKING AND SERVICING PLANNING SCHEME POLICY" OF BRISBANE CITY PLAN.
2. ROUNDING MAY BE REQUIRED WHERE CHANGE IN PROFILES EXCEED 5%. REFER TO BRISBANE CITY PLAN. GENERALLY A ROUNDING APPROXIMATING TO THE AVERAGE SLOPE OVER 6.4m IS SUITABLE.
3. WHEN FOOTPATH WIDTH EXCEEDS 4.25m THE DESIRABLE POSITION OF STRIP FOOTPATH IS 1.42m FROM PROPERTY ALIGNMENT.
4. THE NEED FOR A FLAT APPROACH GRADE (EG. QUEUE LENGTH) FROM THE PRIVATE PROPERTY TO THE FOOTPATH IS DEPENDENT ON CARPARK CAPACITY AND TURNOVER RATES. THE HIGHER THE CAPACITY AND EXPECTED TURNOVER RATES, THE MORE CRITICAL ARE THESE REQUIREMENTS. REFER "TRANSPORT, ACCESS, PARKING AND SERVICING PLANNING SCHEME POLICY" OF BRISBANE CITY PLAN.
5. THE LAYOUTS OF DRIVEWAYS ARE DETAILED IN STANDARD DRAWINGS BSD-2021 & BSD-2022.
6. DIMENSIONS IN METRES (U.N.O.).

ISSUE	AMENDMENT	DRAWN DATE	CHK'D DATE	APPR'D DATE
C	Dimension Corrected, Cross-section Altered to Preferred Std	MAY '17	MAY '17	MAY '17
B	Drawing Title Amended	JAN '16	JUL '16	JUL '16
A	Drawing Converted from UMS Series April 2014	APR '14	APR '14	APR '14

DRAWING AUTHORISED FOR PUBLICATION
B.BALL SIGNATURE ON ORIGINAL
DATED 29/6/01 R.P.E.Q: 3 8 5 2
ASSET ENGINEERING MANAGER
STRATEGIC ASSET MANAGEMENT
DESIGN APPROVED
B.HANSON SIGNATURE ON ORIGINAL
DATED 27/6/01
PRINCIPAL ASSET OFFICER
ROADS & DRAINAGE

DESIGN	Std Dwgs WG	DATE	April '01
DRAWN	CPO - P&D	DATE	April '01
CHECKED	M.STEER	DATE	May '01
DRAWING FILENAME	BSD-2025 (B) Vehicle crossing (driveway) - Grades 4.25m wide footpath).dwg		
ASSOCIATED PLANS	SUPERSEDES UMS-225		

BRISBANE CITY

BRISBANE CITY COUNCIL STANDARD DRAWING

VEHICLE CROSSING (DRIVEWAY) GRADES (4.25m WIDE FOOTPATH)

SCALE: NOT TO SCALE
DWG No.: **BSD-2025**
ORIGINAL SIZE: A3
REVISION: C

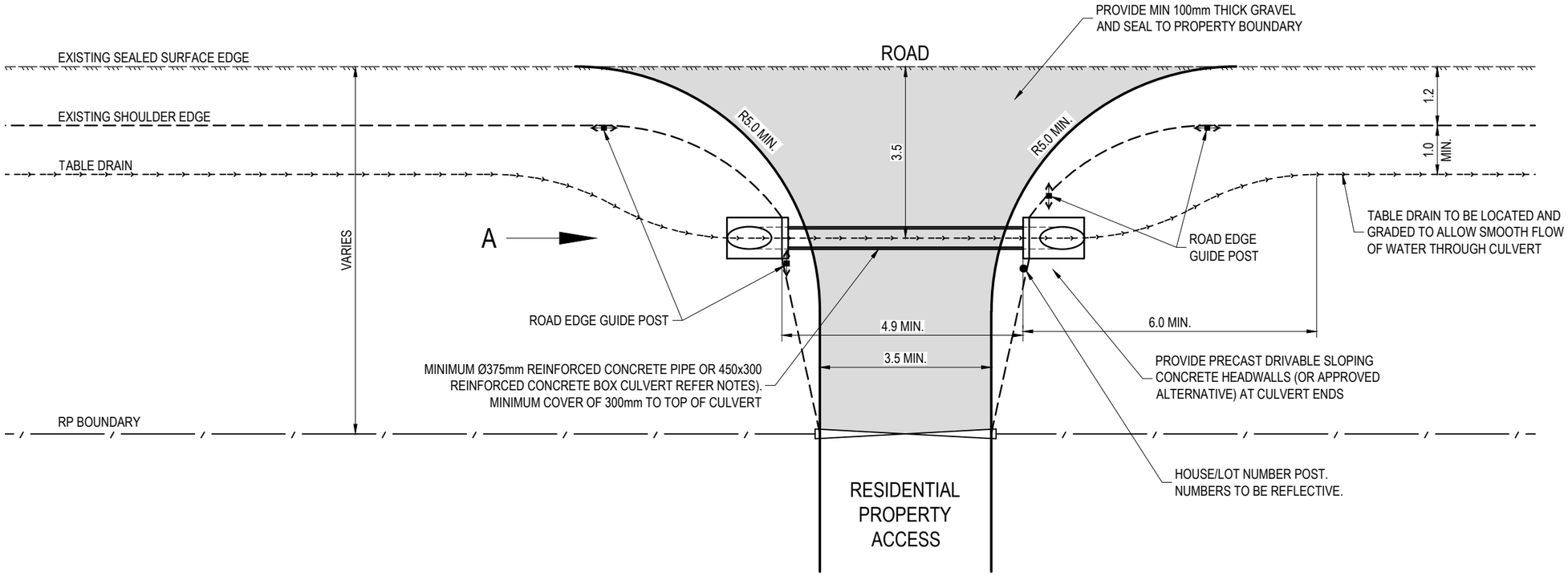

PLAN VIEW

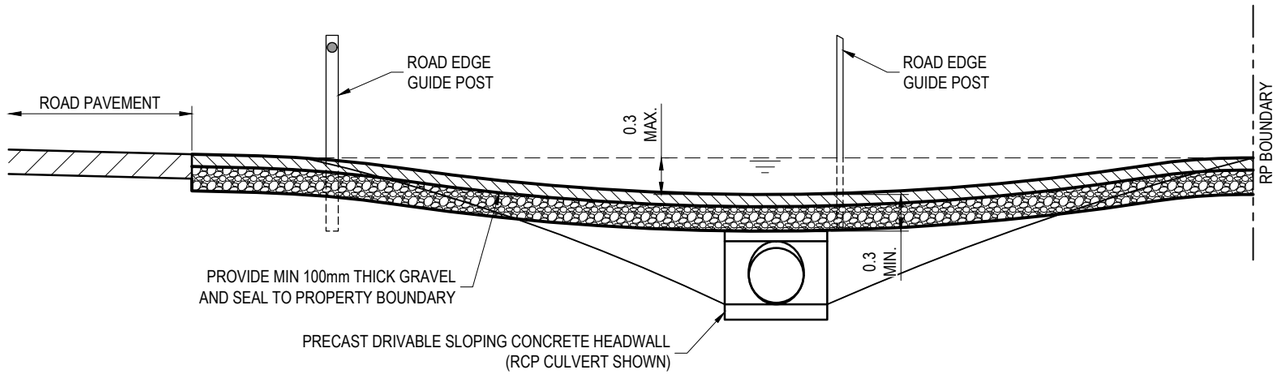

END ELEVATION 'A'

NOTES:

1. PIPE OR BOX CULVERT CROSSINGS ARE NOT TO BE INSTALLED ON ROADS THAT FALL TO THE SUBJECT PROPERTY OR WHERE STORM WATER CANNOT BE DIRECTED TO A NATURAL WATER COURSE OR DRAINAGE EASEMENT.
2. PROVIDE ROCK, CONCRETE OR STABILISED TURF PROTECTION TO TABLE DRAINS AND OUTLETS WHERE PRONE TO SCOUR.
3. MINIMUM GRADE THROUGH PIPE IS TO BE 1%.
4. ROAD EDGE GUIDE POSTS TO BE LOCATED AT PIPE ENDS AND BE IN ACCORDANCE WITH BSD-7121.
5. WHERE PIPE IS USED FOR CULVERT, PIPE TO BE MINIMUM CLASS 3 REINFORCED CONCRETE PIPE (FIBRE OR STEEL REINFORCED).
6. MINIMUM HYDRAULIC CAPACITY OF PIPE AND ACCESS TO MATCH THE CAPACITY OF THE TABLE DRAIN. THIS MAY REQUIRE THE USE OF MULTIPLE BARRELS.
7. CULVERT INVERTS TO MATCH TABLE DRAIN INVERTS.
8. REDUNDANT PROPERTY ACCESSES ARE TO BE COMPLETELY REMOVED AND THE ADJACENT ROAD PAVEMENT, KERB AND CHANNEL (IF PRESENT) AND VERGE (INCLUDING TABLE DRAIN) IS TO BE REINSTATED TO MATCH EXISTING.
9. ALL DIMENSIONS IN METRES (U.N.O.).

BRISBANE CITY

BRISBANE CITY COUNCIL STANDARD DRAWING

RURAL PROPERTY ACCESS
CULVERT CROSSING
TABLE DRAINS

PUBLISH DATE	Mar '21
SCALE	NOT TO SCALE
DRAWING NUMBER	BSD-2026
ORIGINAL SIZE	A3
REVISION	C

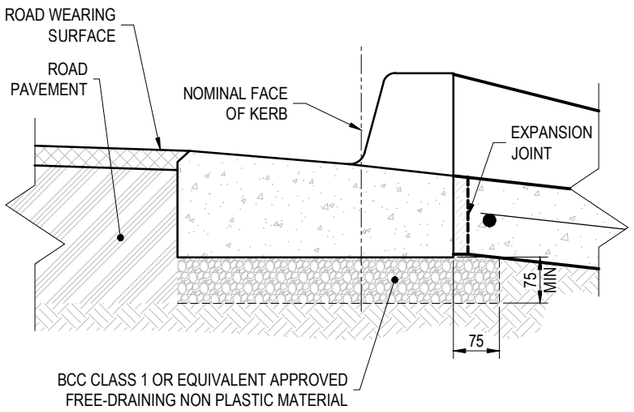

SECTION A-A
(FOR TYPE 'E' KERB AND CHANNEL)

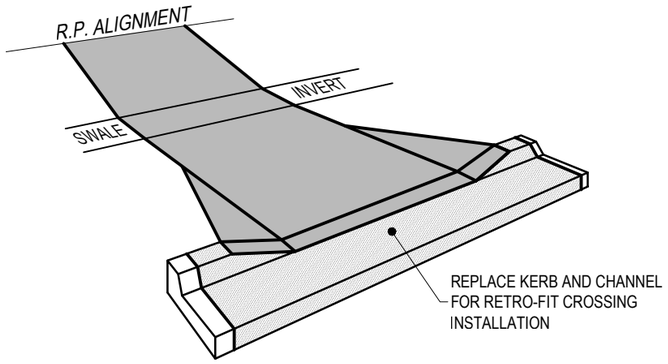

PERSPECTIVE VIEW
FOR TYPE 'E' KERB AND CHANNEL

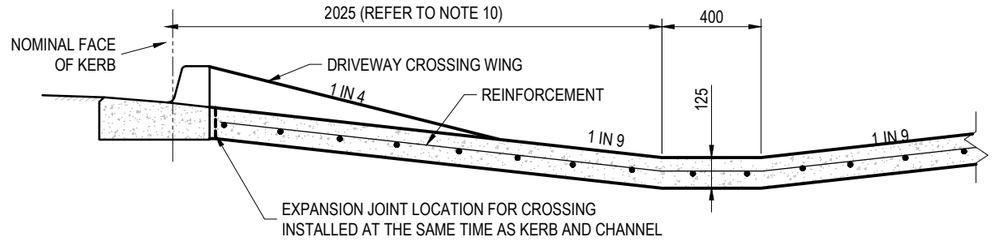

SECTION 'A'
(WITH TYPE 'E' KERB AND CHANNEL)

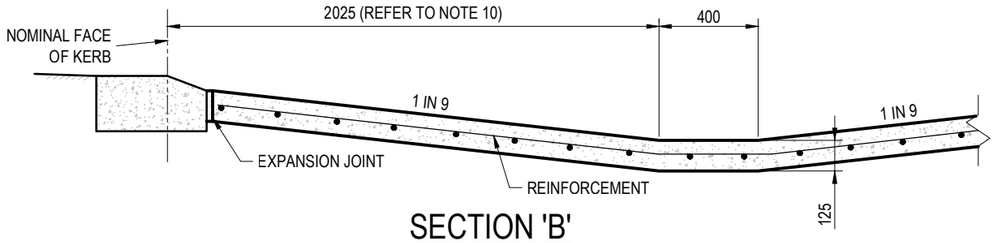

SECTION 'B'
(WITH TYPE 'G' KERB)

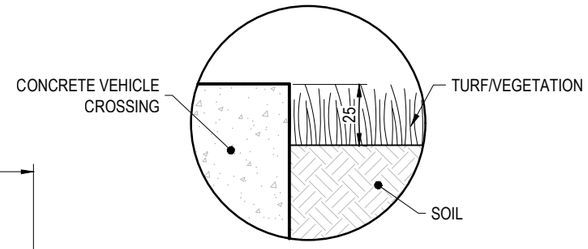

DETAIL A

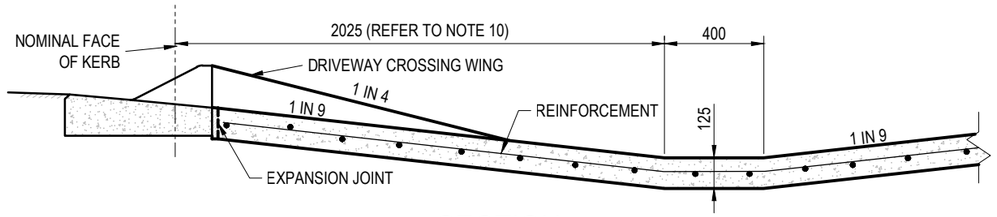

SECTION
(WITH TYPE 'D' KERB)

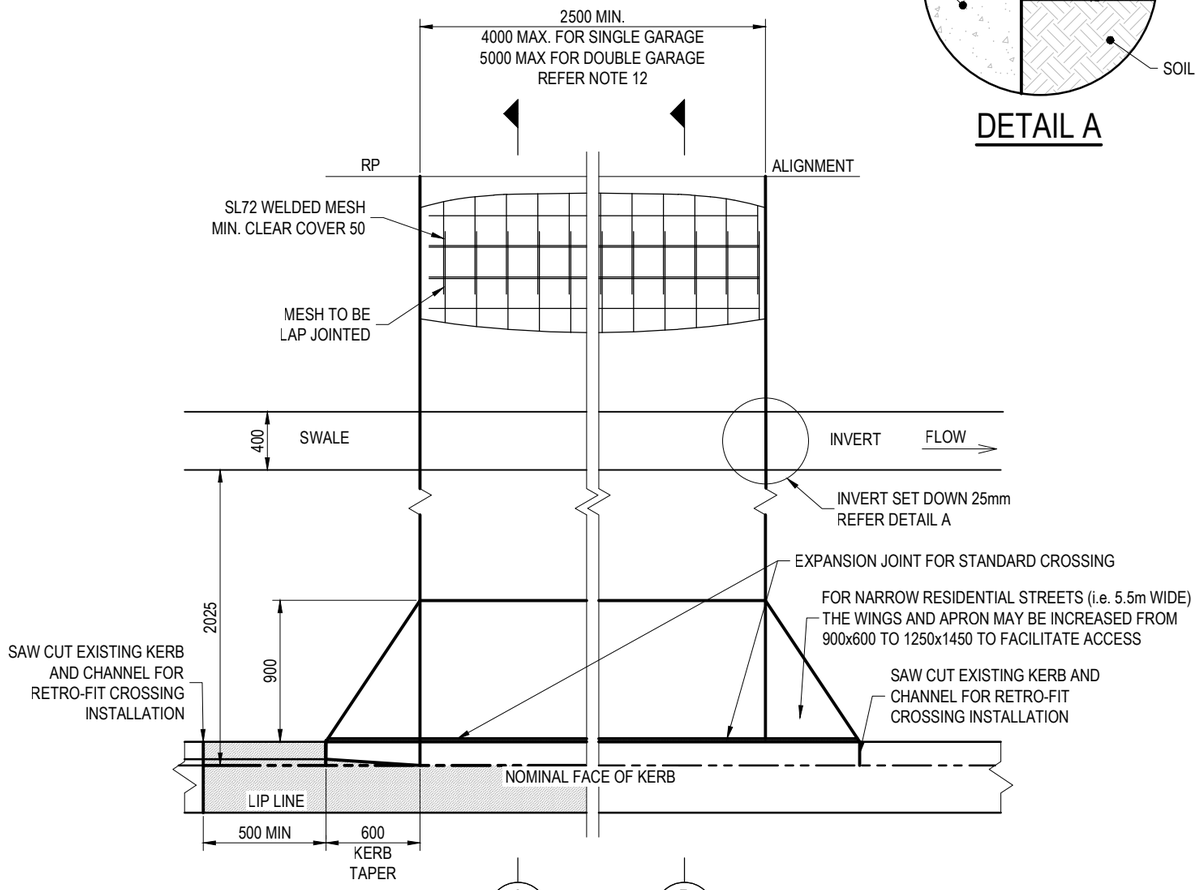

PLAN

NOTES:

1. THE SPECIFIED PAVEMENT STANDARD DOES NOT APPLY TO POOR SUBGRADE. REFER SUPPLEMENTARY NOTES (BSD-0019) FOR DETAIL.
2. THIS CROSSING IS NOT FOR COMMERCIAL VEHICLES.
3. ALL CONCRETE TO BE GRADE N32 (MIN.).
4. ALL CONCRETE TO BE BROOM FINISHED. FOR SLIP RESISTANCE REQUIREMENTS. REFER REFERENCE SPECIFICATION FOR ENGINEERING WORKS S200 CONCRETE WORK.
5. EXPANSION JOINTS TO BE FULL DEPTH 10 THICK CLOSED CELL CROSS LINKED POLYETHYLENE FOAM (85-150kg/m^3). SEAL SURFACE OF JOINT WITH A SUITABLE POLYURETHANE SEALANT.
6. THE THICKNESS OF DECORATIVE SURFACING, WHERE APPROVED, IS ADDITIONAL TO THE THICKNESS SHOWN.
7. PERMITS RELATING TO ROADS AND DRAINAGE MUST BE OBTAINED FROM COUNCIL (EITHER FROM REGIONAL BUSINESS CENTRES OR www.brisbane.qld.gov.au) TO SEEK APPROVAL OF LOCATION AND LEVELS PRIOR TO ANY EXCAVATION.
8. WHEN CROSSING IS RETRO-FITTED TO EXISTING KERB AND CHANNEL, THE EXISTING KERB AND CHANNEL IS TO BE REMOVED USING A SAW CUT AND NEW KERB AND CHANNEL CONSTRUCTED AS PART OF NEW CROSSING. REFER BSD-2001 FOR STANDARD KERB PROFILES.
9. FOR RETRO-FITTED CROSSINGS EXISTING ROAD PAVEMENT TO BE SAW CUT TO ALLOW CLEAN REMOVAL OF EXISTING KERB AND CHANNEL. REINSTATE ROAD PAVEMENT AFTER CONSTRUCTION OF NEW CROSSING.
10. DISTANCE FROM NOMINAL FACE OF KERB MAY VARY WITH SWALE WIDTH. GRADES ARE RECOMMENDED MAXIMUMS FOR VEHICLE ACCESS.
11. OFFSETS TO EXISTING STREET FURNITURE AND FEATURES SUCH AS STREET TREES, STORMWATER GULLIES, ELECTRICITY INFRASTRUCTURE AND TRAFFIC SIGNS AS PER BSD-2022.
12. NARROW LOT FRONTAGE CROSSOVER MAXIMUM WIDTHS
    - FRONTAGE ≥7.5m BUT <10m: 4.0m;
    - FRONTAGE <7.5m: 3.5m.
13. ON MINOR ROADS CROSSOVER TO BE A MINIMUM:
    - 10m FROM A MINOR INTERSECTION;
    - 20m FROM A MAJOR INTERSECTION.
14. REFER BSD-2001 FOR KERB AND CHANNEL PROFILES.
15. MAINTENANCE OF VEHICLE CROSSINGS (DRIVEWAYS) IS THE RESPONSIBILITY OF THE PROPERTY OWNER.
16. REDUNDANT VEHICLE CROSSINGS (DRIVEWAYS) ARE TO BE COMPLETELY REMOVED AND THE ADJACENT KERB AND CHANNEL AND VERGE IS TO BE REINSTATED TO MATCH EXISTING.
17. DIMENSIONS IN MILLIMETRES (U.N.O.).

BRISBANE CITY

BRISBANE CITY COUNCIL STANDARD DRAWING

VEHICLE CROSSING (DRIVEWAY) - SINGLE DWELLING - GRASS VERGE SWALE

PUBLISH DATE	JUN 2023
SCALE	NOT TO SCALE
DRAWING NUMBER	BSD-2028
ORIGINAL SIZE	A3
REVISION	F

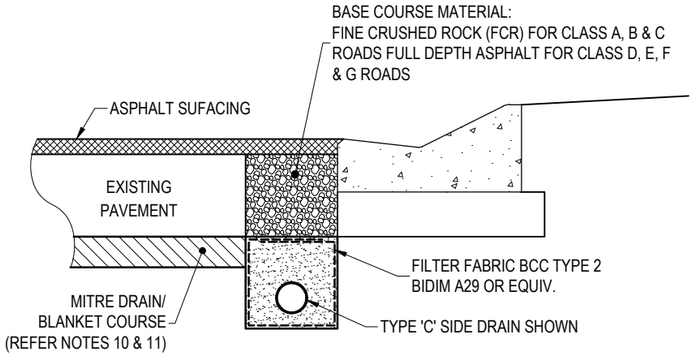

TYPICAL SECTION WITH EXISTING KERB & CHANNEL

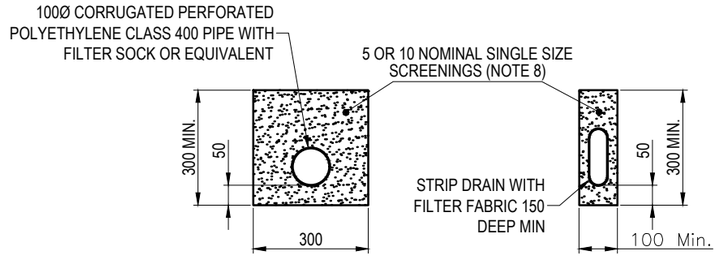

TYPE 'A' TYPE 'B'

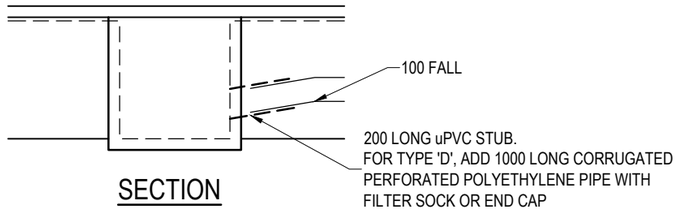

SECTION

SIDE DRAIN OUTLET (SINGLE GULLY ONLY)

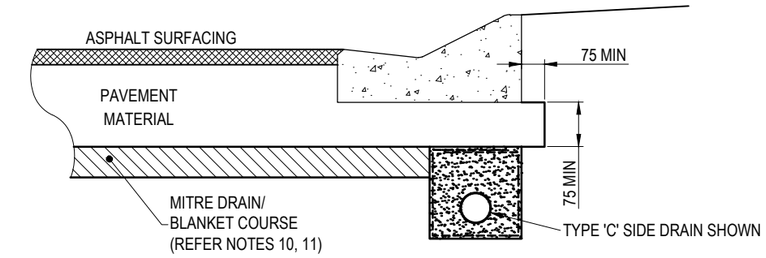

TYPICAL SECTION WITH NEW ROAD CONSTRUCTION

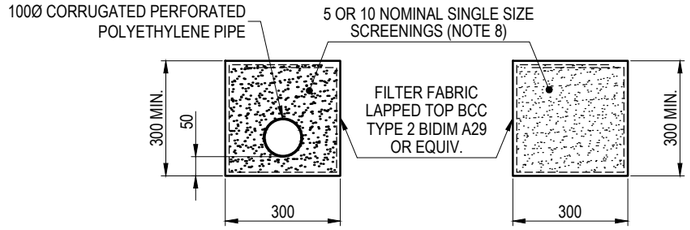

TYPE 'C' TYPE 'D'

TYPES OF SIDE DRAINS

(REFER NOTE 12)

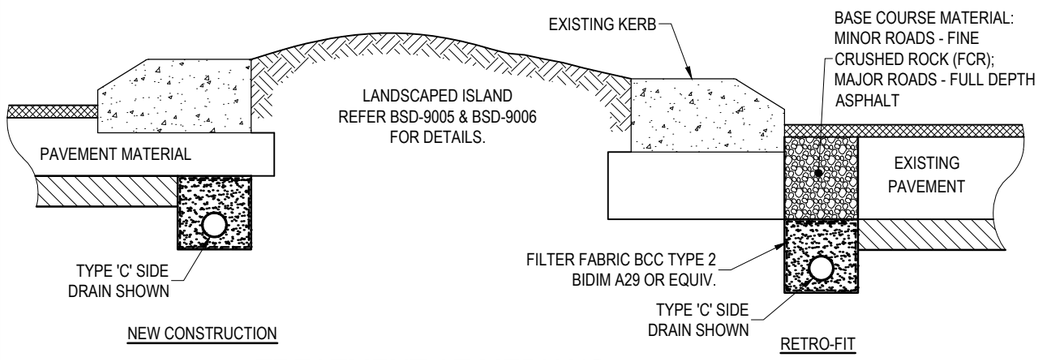

TREATMENT AT MEDIANS

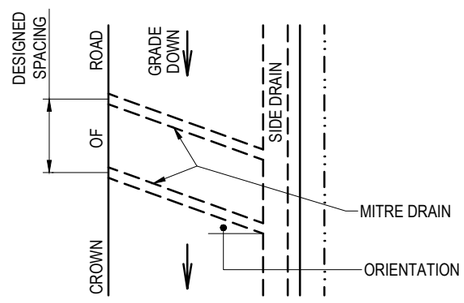

MITRE DRAIN LAYOUT

LEGEND

SCREENINGS OR COMPACTED BCC CLASS 1 CRUSHED ROCK OR EQUIVALENT, APPROVED FREE DRAINING NON PLASTIC MATERIAL. PERMEABILITY IN ACCORDANCE WITH AS1289.6.7.1 TO BE 0.01-10mm/s.

NOTES:

1. THE SIDE DRAIN DEPTH TO BE A MIN. OF 300mm BELOW THE SUBGRADE. PROVIDE A MIN. 300 COVER TO PIPE.
2. SIDE DRAINS SHALL OUTLET TO A GULLY, PREFERABLY, OR STORMWATER PIPE.
3. 100Ø CORRUGATED POLYETHYLENE (PE) PIPE AND FITTINGS TO BE CLASS 400 TO AS 2439.
4. USE STANDARD FITTINGS FOR ALL CONNECTIONS INCLUDING THE JOINING OF LENGTHS OF CORRUGATED PIPE.
5. DRAINAGE PIPES TO BE LAID TO A MINIMUM GRADE OF 1 in 250 FOR PIPE DRAINS AND TO A MINIMUM GRADE OF 1 in 100 FOR SCREENING ONLY DRAINS.
6. SCREENING SURROUND AND THE BACKFILL PAVEMENT MATERIAL MUST BE ADEQUATELY COMPACTED TO PROVIDE FLEXIBLE PIPE SUPPORT AS REQUIRED IN ACCORDANCE WITH AS 2566.
7. SUPPLY AND INSTALL PANEL DRAINS, IF USED, TO THE MANUFACTURERS SPECIFICATIONS.
8. GRADING OF SINGLE SIZE SCREENING MATERIALS.

A.S. SIEVE SIZE(mm)	%PASSING (% BY WEIGHT)	
	5mm NOMINAL SIZE	10mm NOMINAL SIZE
13.20	--	100
9.50	--	85 - 100
6.70	100	--
4.75	85 - 100	0 - 20
2.36	0 - 40	0 - 5
0.075	0 - 2	0 - 2

9. UNLESS APPROVED OTHERWISE BY COUNCIL, PROVIDE SIDE DRAINS ON BOTH SIDES OF THE ROAD UNDER (NEW CONSTRUCTION) OR ADJACENT TO (RETROFIT) THE KERB AND CHANNEL.
10. MITRE DRAINS (SIMILAR CONSTRUCTION TO SIDE DRAINS) ARE REQUIRED ACROSS THE ROAD TO INTERCEPT SEEPAGE THAT DOES NOT FLOW DIRECTLY TO THE SIDE DRAIN.
11. WHERE SEEPAGE APPEARS IN THE CENTRE OF THE PAVEMENT, PROVIDE 75 THICK FULL WIDTH BLANKET COURSE (SCREENINGS OR CLASS 1 CRUSHED ROCK) TO INTERCEPT SEEPAGE AND DRAIN TO THE ADJACENT SIDE DRAINS. PROVIDE BCC TYPE 3 GEOTEXTILE FABRIC AT THE SUBGRADE/BLANKET COURSE INTERFACE. BLANKET COURSE IS GENERALLY REQUIRED UNDERNEATH FULL DEPTH ASPHALT PAVEMENTS TO AVOID BLOCKAGE OF SEEPAGE FLOW.
12. SUB SURFACE DRAINAGE REQUIREMENTS (INCLUDING TYPE, LOCATION, SPACING AND ORIENTATION) MUST BE DETERMINED BY A SUITABLY QUALIFIED REGISTERED PROFESSIONAL ENGINEER.
13. DIMENSIONS IN MILLIMETRES (UNO).

ISSUE	AMENDMENT	DRAWN DATE	CHK'D DATE	APPR'D DATE
C	Note 9 Updated - Reference To Council Section Removed	JAN '19	APR '19	Apr RPEQ 16110 '19
B	Drawing Title Amended	JAN '16	JUL '16	JUL '16
A	Drawing Converted from UMS Series April 2014	APR '14	APR '14	APR '14

DRAWING AUTHORISED FOR PUBLICATION
B.BALL SIGNATURE ON ORIGINAL
DATED 29/6/01 R.P.E.Q: 3852
ASSET ENGINEERING MANAGER
STRATEGIC ASSET MANAGEMENT
DESIGN APPROVED
B.HANSON SIGNATURE ON ORIGINAL
DATED 27/6/01
PRINCIPAL ASSET OFFICER
ROADS & DRAINAGE

DESIGN	Std Dwgs WG	DATE	April '01
DRAWN	CPO - P&D	DATE	April '01
CHECKED	M.STEER	DATE	May '01
DRAWING FILENAME	BSD-2041 (C) Pavement drains.dwg		
ASSOCIATED PLANS	SUPERSEDES UMS-261		

BRISBANE CITY

BRISBANE CITY COUNCIL STANDARD DRAWING

PAVEMENT DRAINS

SCALE: NOT TO SCALE
DWG No.: BSD-2041
ORIGINAL SIZE: A3
REVISION: C

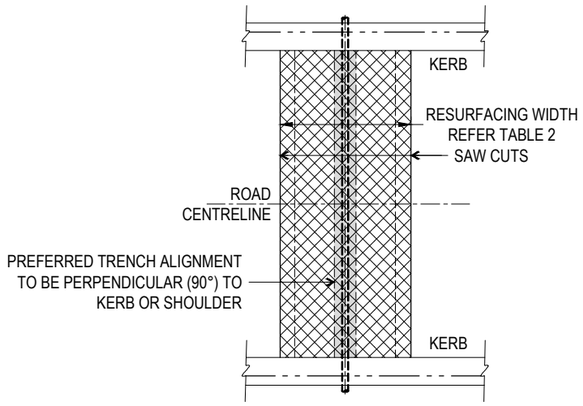

TYPICAL PLAN VIEW -
TRANSVERSE TRENCH

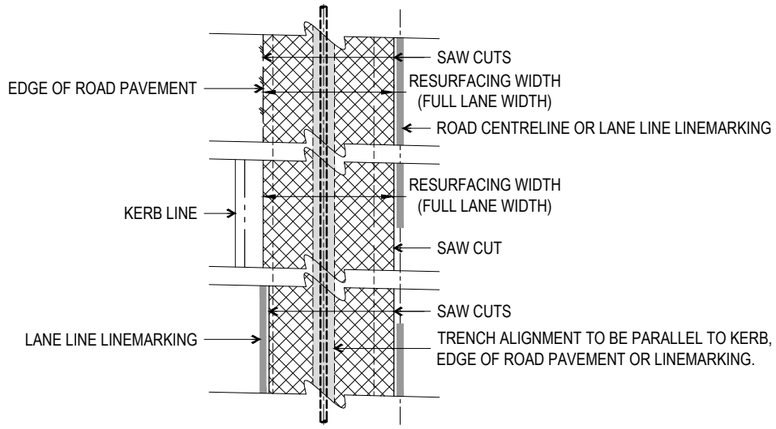

TYPICAL PLAN VIEW -
LONGITUDINAL TRENCH
(REFER NOTE 4)

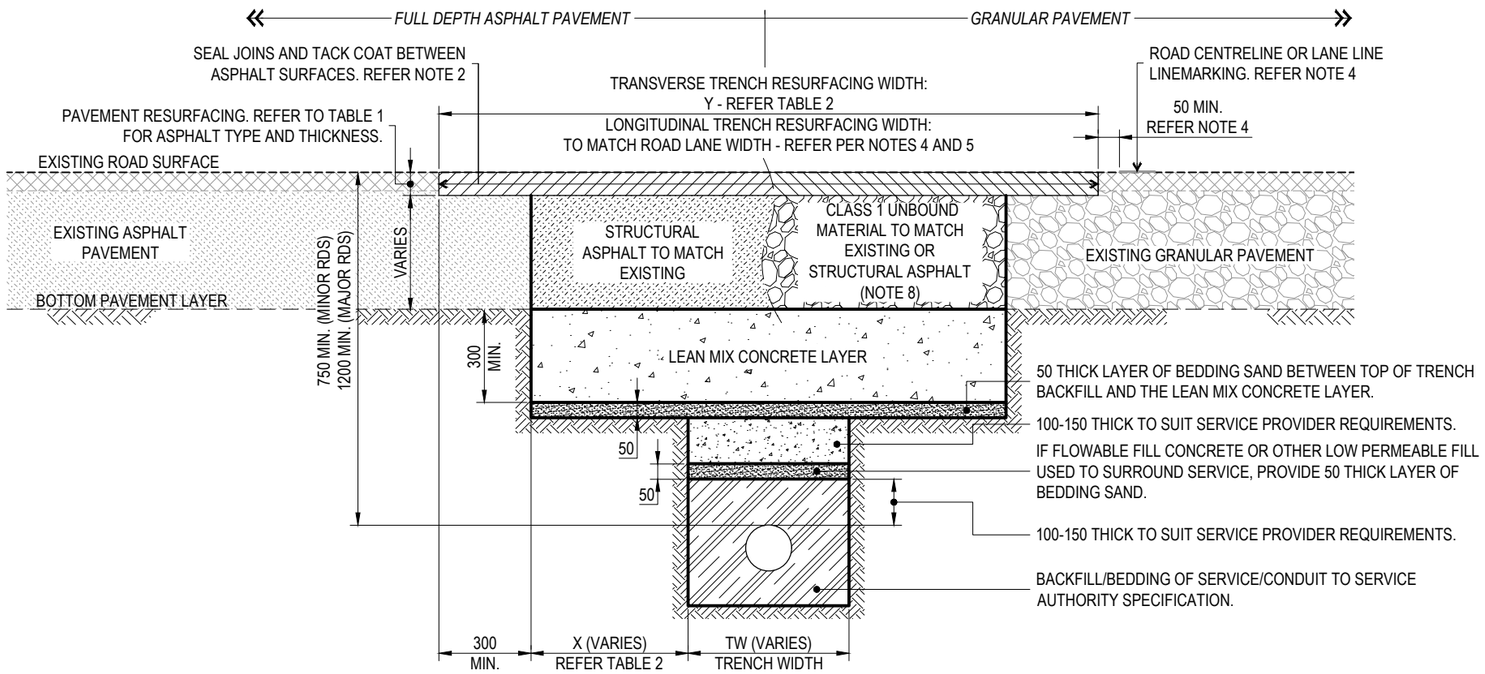

TYPICAL TRENCH REINSTATEMENT
CROSS-SECTION

TABLE 1 - SURFACE LAYER

	ASPHALT MIX		SURFACE THICKNESS (EXCLUDING PAVEMENT)	
LOCATION	BCC	DTMR	EACH LAYER	TOTAL
MINOR ROAD	TYPE 2	DG10	25-40mm	MIN. 50mm OR ADJACENT ASPHALT THICKNESS, WHICHEVER IS GREATER
MINOR ROAD	TYPE 3	DG14	50-60mm	MIN. 100mm OR ADJACENT ASPHALT THICKNESS, WHICHEVER IS GREATER

NOTES:

1. TRENCHLESS TECHNOLOGY TECHNIQUES ARE THE PREFERRED METHOD FOR ROAD CROSSING SERVICES CONDUITS IN EXISTING ROADWAYS.
2. ASPHALT TO ASPHALT JOINT - SAW CUT EXISTING AC WHERE SHOWN OR AS AGREED WITH COUNCIL REPRESENTATIVE ON SITE TO PROVIDE CLEAN CUT AND SEAL WITH BITUMEN EMULSION CRACK SEALANT. APPLY BITUMEN EMULSION TACK COAT TO ALL OTHER NEWLY EXPOSED ASPHALT SURFACES PRIOR TO PLACEMENT OF REINSTATED ASPHALT PAVEMENT OR SURFACE.
3. ALL EXPOSED FACES OF GRAVEL PAVEMENT TO BE TO BE PRIMED DURING SEALING OPERATIONS.
4. WHERE THE TRENCH HAS BEEN CONSTRUCTED LONGITUDINALLY IN THE ROAD, THEN THE FINAL SURFACE REPAIR WIDTH IS TO MATCH THE EXISTING LANE WIDTH AND TERMINATE 50mm CLEAR OF THE ROAD CENTRELINE OR LANE LINE LINE MARKING TO ALLOW FOR THE BITUMEN EMULSION JOINT SEAL. REINSTATEMENT OF SURFACE ADJACENT TO THE KERB OR ROAD PAVEMENT EDGE TO EXTEND FULLY TO THE KERB LINE OR EDGE OF PAVEMENT.
5. A PART LANE RESURFACING MAY BE APPROVED WHERE THE FULL REINSTATEMENT IS ABLE TO BE COMPLETED BETWEEN THE INNER AND/OR OUTER EDGE AND CENTRE OF THE LANE. WHERE THIS IS TO OCCUR THE RESURFACING MAY EXTEND 300 BEYOND THE CENTRE OF THE LANE.
6. THE VERTICAL DEVIATION FROM A 3m STRAIGHT EDGE PARALLEL TO THE CENTRE LINE OF THE EXISTING ROAD IS NOT TO EXCEED 5mm.
7. ASPHALT SURFACE REPAIRS ARE TO BE UNDERTAKEN WITHIN 24 HOURS UNLESS APPROVED OTHERWISE BY COUNCIL. FINAL ASPHALT LAYERS TO BE PLACED BY PAVING MACHINE.
8. WHERE STRUCTURAL ASPHALT IS USED TO REINSTATE EXISTING GRANULAR PAVEMENT, SUBSOIL DRAINAGE (AS PER BSD-2041) IS TO BE INSTALLED ON THE UPHILL SIDE OF THE TRENCH UNLESS APPROVED OTHERWISE BY COUNCIL.
9. STANDARD DRAWINGS TO BE READ IN CONJUNCTION WITH THE FOLLOWING REFERENCE SPECIFICATIONS FOR CIVIL ENGINEERING WORKS:
   - S140: EARTHWORKS;
   - S145: INSTALLATION AND MAINTENANCE OF UTILITY SERVICES;
   - S300: QUARRY PRODUCTS;
   - S310: SUPPLY OF DENSE GRADED ASPHALT;
   - S320: LAYING OF ASPHALT.
10. FOR BACKFILL REQUIREMENTS FOR STORMWATER DRAINAGE PIPES, REFER TO STANDARD DRAWING BSD-8011.
11. FOR LOCATION OF MARKER TAPE AND COVER STRIP FOR TRAFFIC SIGNAL CONDUITS, REFER TO STANDARD DRAWINGS BSD-4015 & BSD-4016.
12. ALL DIMENSIONS ARE IN MILLIMETRES (U.N.O.).

TABLE 2

TRENCH WIDTH (TW)	X	Y
<600	TW/2 (150 MIN.)	1500 MIN.
>600	300 MIN.	2200 MIN.

BRISBANE CITY

BRISBANE CITY COUNCIL STANDARD DRAWING

TRENCH RESTORATION
ROAD CROSSING
FLEXIBLE PAVEMENTS

PUBLISH DATE	SEP 2024
SCALE	NOT TO SCALE
DRAWING NUMBER	BSD-2042
ORIGINAL SIZE	A3
REVISION	C

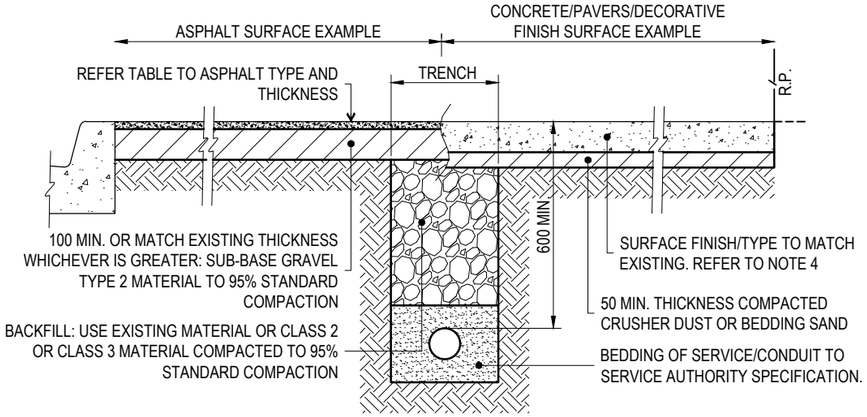

VERGE WITH FULL WIDTH CONSTRUCTED PATH

(LONGITUDINAL TRENCH SHOWN. APPLY SAME REQUIREMENTS FOR TRANSVERSE TRENCHING)

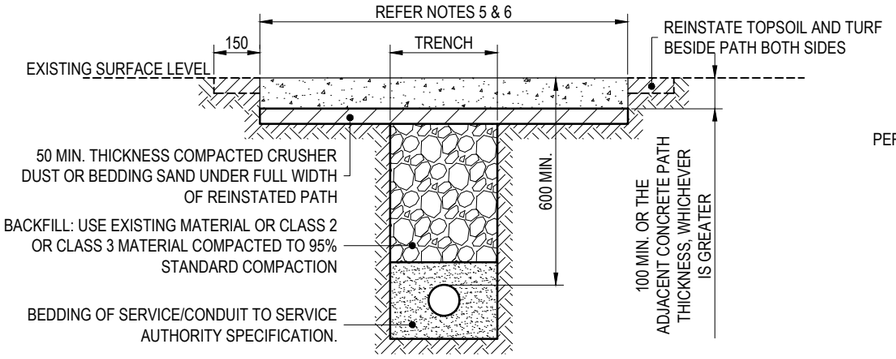

UNSEALED LAND WITH STRIP CONSTRUCTED PATH

(TRANSVERSE TRENCH SHOWN. APPLY SAME REQUIREMENTS FOR LONGITUDINAL TRENCHING)

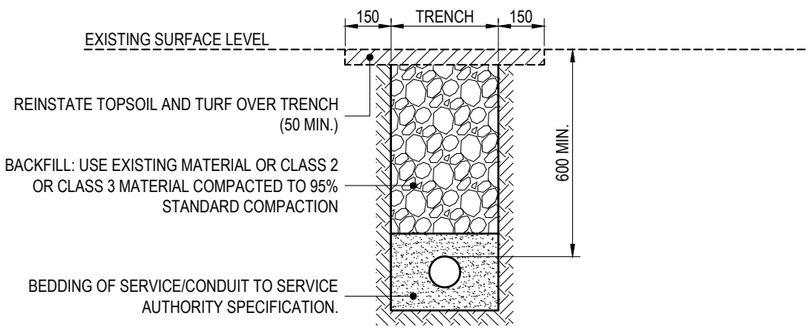

UNSEALED LAND (NO CONSTRUCTED PATH)

(TRANSVERSE TRENCH SHOWN. APPLY SAME REQUIREMENTS FOR LONGITUDINAL TRENCHING)

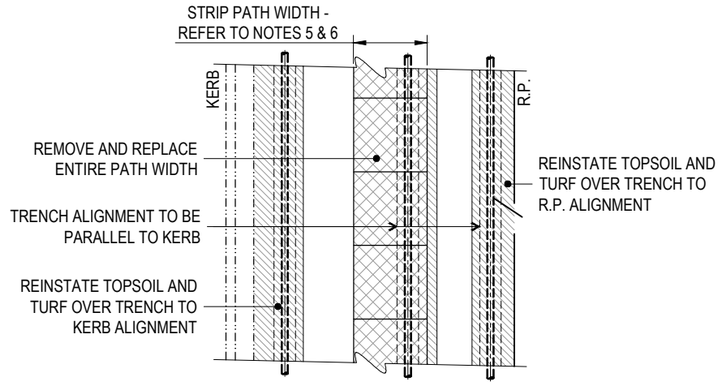

TYPICAL PLAN VIEW - LONGITUDINAL TRENCHING THROUGH STRIP PATH AND UNSURFACED AREAS

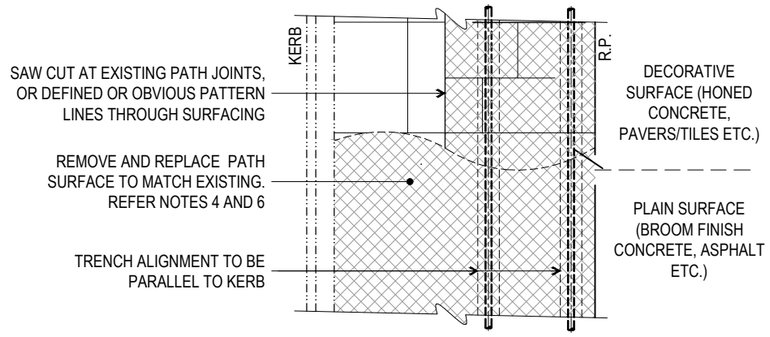

TYPICAL PLAN VIEW - LONGITUDINAL TRENCH THROUGH FULL WIDTH PATH

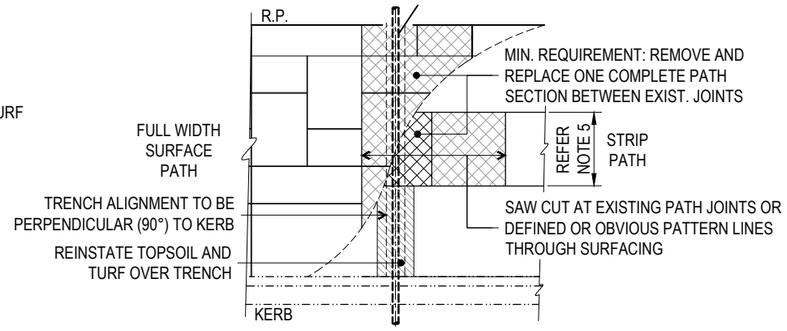

TYPICAL PLAN VIEW - TRANSVERSE TRENCH ACROSS VERGE

NOTES:

1. TRENCHLESS TECHNOLOGY TECHNIQUES ARE THE PREFERRED METHOD FOR ROAD CROSSING SERVICES CONDUITS IN EXISTING VERGES.
2. THE VERTICAL DEVIATION FROM A 1200 LONG STRAIGHT EDGE (IN ALL DIRECTIONS), IS NOT TO EXCEED 5mm.
3. SURFACE REPAIRS ARE TO BE UNDERTAKEN WITHIN 24 HOURS UNLESS APPROVED OTHERWISE BY COUNCIL.
4. WHERE THE TRENCH HAS BEEN CONSTRUCTED LONGITUDINALLY IN THE VERGE, THE FINAL SURFACE REPAIR WIDTH IS TO MATCH THE EXISTING SURFACE WIDTH (e.g. 1.2m, FULL WIDTH etc.). FOR CENTRAL BUSINESS DISTRICT, NEIGHBOURHOOD CENTRES, SUBURBAN CENTRE IMPROVEMENT PROJECTS (SCIP) AND OTHER HIGH FINISH AREAS, REFER TO CHAPTER 5 OF THE INFRASTRUCTURE DESIGN PLANNING SCHEME POLICY (CITY PLAN 2014) FOR PATH FINISH REQUIREMENTS.
5. WIDTH OF STRIP PATH REINSTATEMENT:
   - IF REINSTATEMENT IS LESS THAN 10m LONG: REINSTATE TO MATCH WIDTH OF EXISTING STRIP PATH (1000 MIN.);
   - IF REINSTATEMENT IS GREATER THAN 10m LONG: REINSTATE 1200 MIN. WIDTH PATH.
6. REFER TO STANDARD DRAWINGS BSD-5201, BSD-5202, BSD-5204 & BSD-5207 FOR CONCRETE FOOTPATH DETAILS, TO BSD-5208 FOR BIKE PATH DETAILS AND BSD-5210 FOR PAVER FOOTPATH DETAILS.
7. STANDARD DRAWINGS TO BE READ IN CONJUNCTION WITH THE FOLLOWING REFERENCE SPECIFICATIONS FOR CIVIL ENGINEERING WORKS:
   - S140: EARTHWORKS;
   - S145: INSTALLATION AND MAINTENANCE OF UTILITY SERVICES;
   - S205: CENTRES DECORATIVE PATHS;
   - S206: CONCRETE PATH ARTICULATED JOINT SYSTEM;
   - S300: QUARRY PRODUCTS;
   - S310: SUPPLY OF DENSE GRADED ASPHALT;
   - S320: LAYING OF ASPHALT .
7. FOR TRENCH RESTORATION FOR STORMWATER DRAINAGE PIPES, REFER TO STANDARD DRAWING BSD-8011.
8. FOR TRENCH RESTORATION FOR TRAFFIC SIGNAL CONDUITS, REFER TO STANDARD DRAWINGS BSD-4015 & BSD-4016.
9. ALL DIMENSIONS IN MILLIMETRES (U.N.O.).

TABLE 1 - ASPHALT SURFACE

	ASPHALT MIX		ASPHALT THICKNESS	
LOCATION	BCC	DTMR	EACH LAYER	TOTAL
FOOTPATHS	TYPE 1	DG7	15-20mm	MIN. 25mm OR THE ADJACENT ASPHALT THICKNESS, WHICHEVER IS GREATER
BIKEPATHS	TYPE 1 OR TYPE 2	DG7 OR DG10	15-20mm (TYPE 1) 25-40mm (TYPE 2)	MIN. 25mm OR THE ADJACENT ASPHALT THICKNESS, WHICHEVER IS GREATER

BRISBANE CITY

BRISBANE CITY COUNCIL STANDARD DRAWING

TRENCH RESTORATION
VERGES AND PATHS

PUBLISH DATE	SEP 2024
SCALE	NOT TO SCALE
DRAWING NUMBER	BSD-2043
ORIGINAL SIZE	A3
REVISION	C

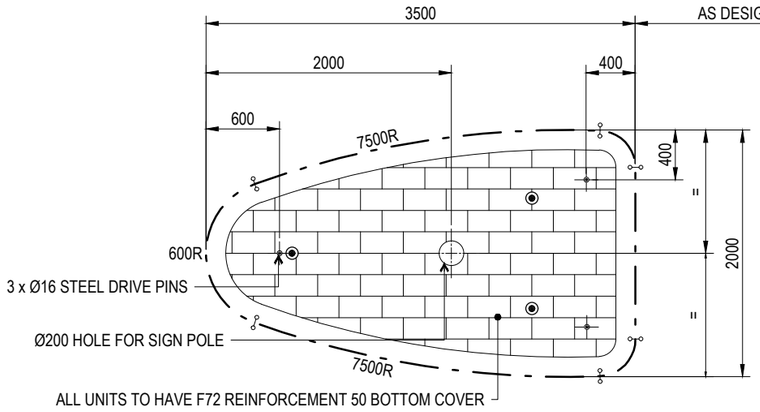

PC-1

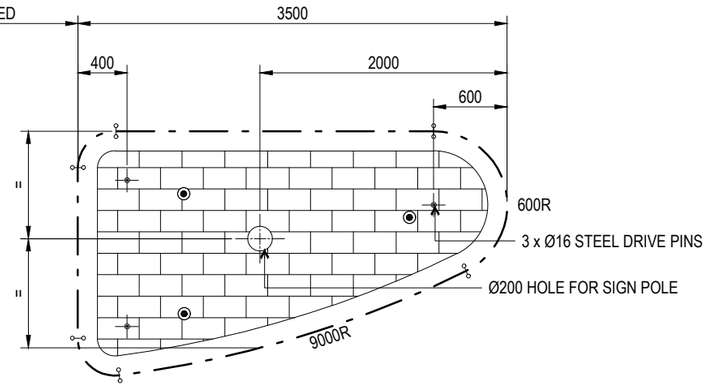

PC-2
(MIRRORED VERSION PC-12)

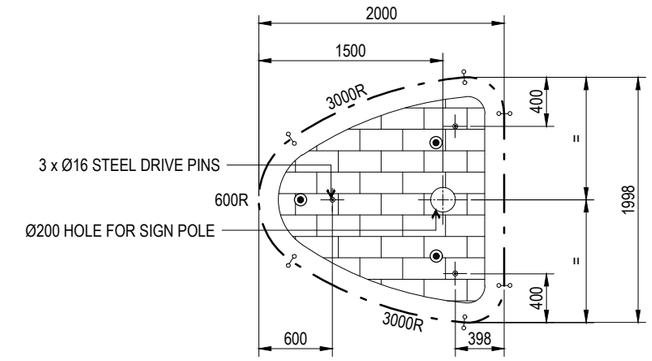

PC-3

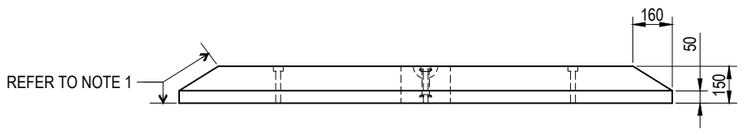

TYPICAL ELEVATION

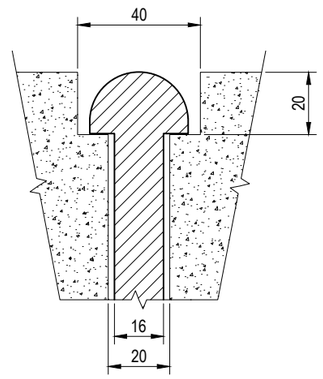

DRIVE PIN DETAIL

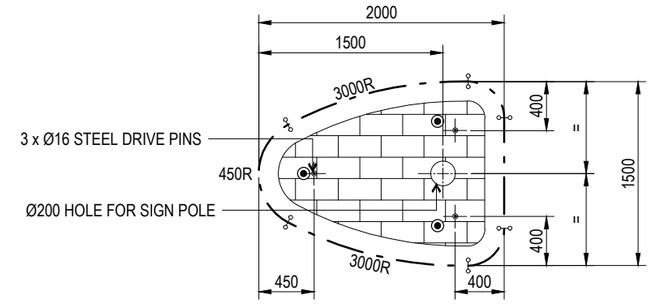

PC-4

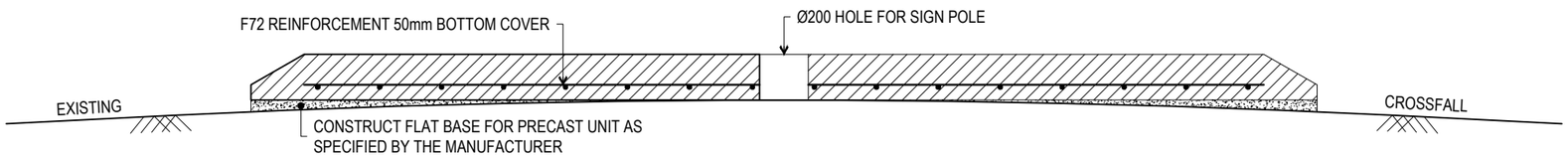

TYPICAL SECTION

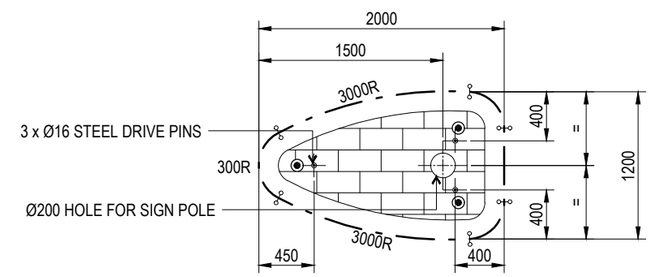

PC-5

NOTES

1. ALL FACES OF KERBS ARE TO BE PAINTED WITH WHITE RETROREFLECTIVE PAINT OR SIMILAR.
2. ISLAND SURFACE SHALL BE STAMPED "BRICK" PATTERN WITH RED COLOUR IN ACCORDANCE WITH B.C.C. SPECIFICATION S155.
3. ALL PRECAST UNITS CONCRETE STRENGTH TO BE 32MPa.
4. ALL DIMENSIONS IN mm AND RADII 300mm UNLESS NOTED OTHERWISE.
5. DRIVE PINS ARE TO BE 16mm DIAMETER MILD STEEL (4.6) 260mm LONG GALVANISED CUPHEAD AND COUNTERSUNK.
6. ◉ DENOTES SWING LIFT ANCHOR POINTS.
7. FOR DESIGN NOTES, CONSTRUCTION NOTES AND LEGEND REFER TO BSD-3201.

BRISBANE CITY COUNCIL STANDARD DRAWING

PRECAST TRAFFIC ISLAND
CODES AND DETAILS
SHEET 1 OF 2

PUBLISH DATE	SEP 2024
SCALE	NOT TO SCALE
DRAWING NUMBER	BSD-2061
ORIGINAL SIZE	A3
REVISION	C

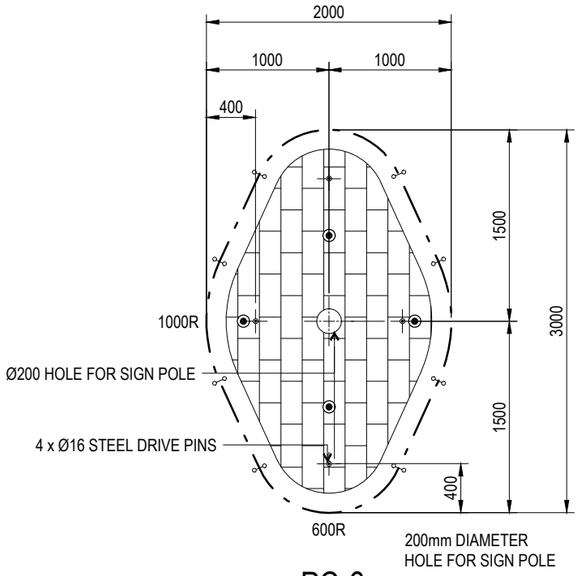

PC-6

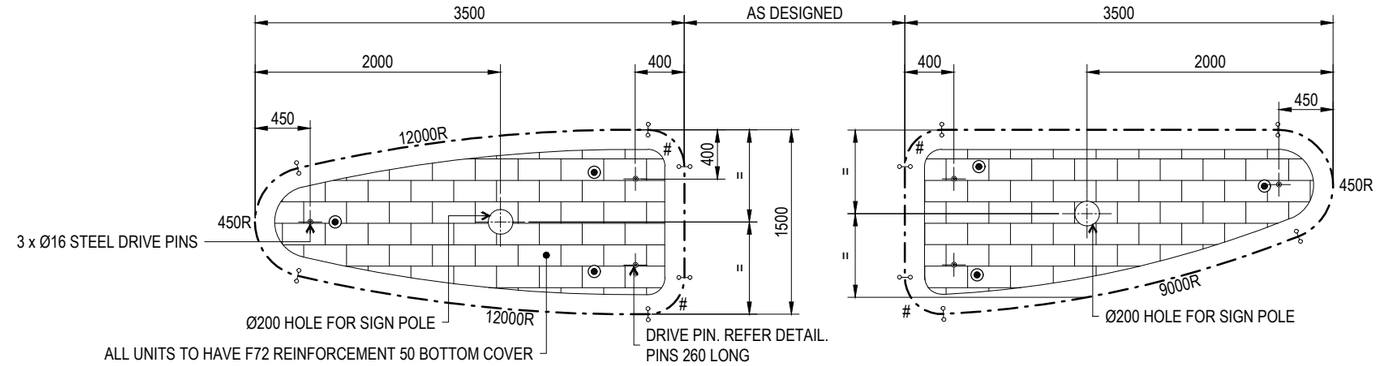

PC-7

PC-8

(MIRRORED VERSION PC-13)

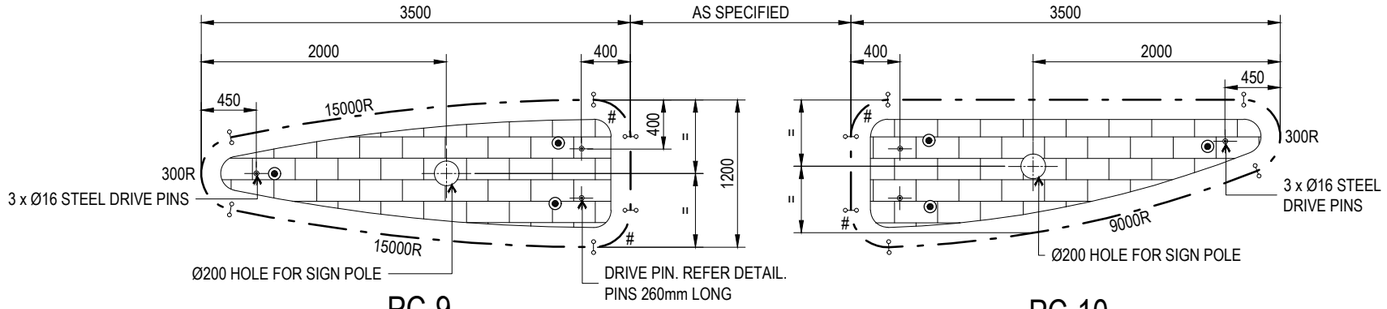

PC-9

PC-10

(MIRRORED VERSION PC-14)

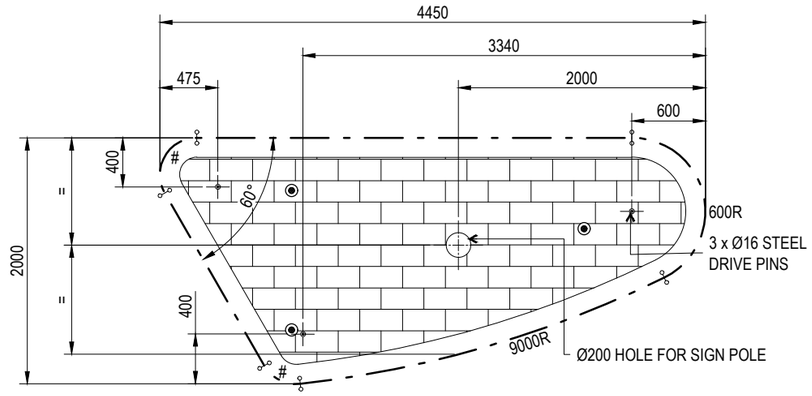

PC-11

(MIRRORED VERSION PC-15)

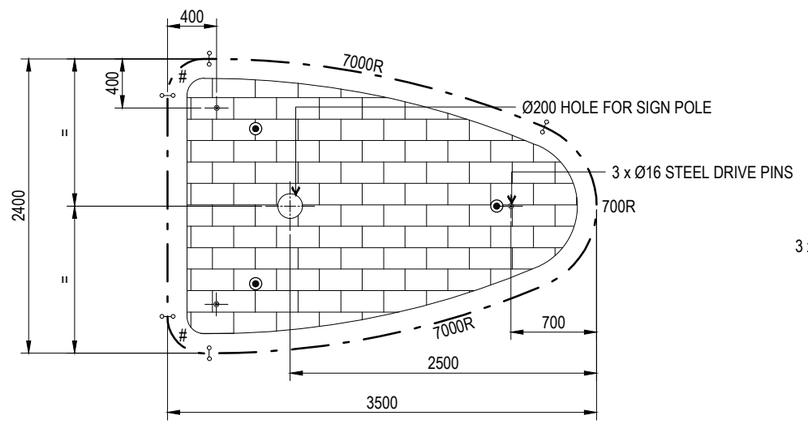

PC-16

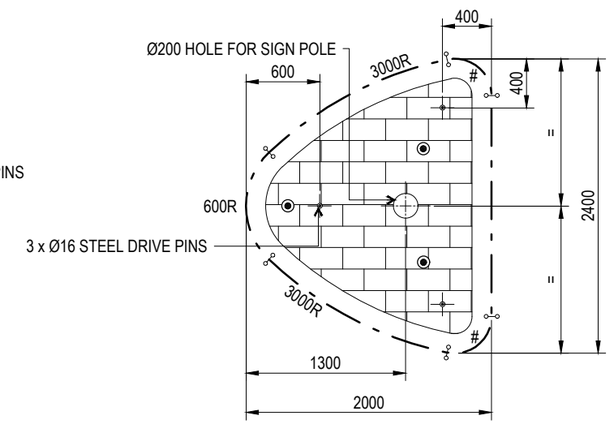

PC-17

NOTES:

1. ALL FACES OF KERBS ARE TO BE PAINTED WITH WHITE RETROREFLECTIVE PAINT OR SIMILAR.
2. ISLAND SURFACE SHALL BE STAMPED "BRICK" PATTERN WITH RED COLOUR IN ACCORDANCE WITH B.C.C. SPECIFICATION S155.
3. ALL PRECAST UNITS CONCRETE STRENGTH TO BE 32MPa.
4. ALL DIMENSIONS IN MILLIMETRES AND RADII 300mm (#) UNLESS NOTED OTHERWISE.
5. DRIVE PINS ARE TO BE 16mm DIAMETER MILD STEEL (4.6) 260mm LONG GALVANISED CUPHEAD AND COUNTERSUNK.
6. ◉ DENOTES SWING LIFT ANCHOR POINTS.
7. REFER TO BSD-2061 FOR TYPICAL ELEVATION, SECTION AND DRIVE PIN DETAILS.
8. FOR DESIGN NOTES, CONSTRUCTION NOTES AND LEGEND REFER TO BSD-3201.

THE PURPOSE OF THIS STANDARD DRAWING IS TO PROVIDE TYPICAL DETAILS THAT SUPPORT THE DESIRED OUTCOMES OF THE BRISBANE CITY PLAN 2014 AND ASSOCIATED PLANNING SCHEME POLICIES. THE FITNESS FOR PURPOSE OF THIS STANDARD DRAWING FOR A SPECIFIC PROJECT SHOULD BE ASSESSED AND ACCEPTED BY AN APPROPRIATELY QUALIFIED DESIGNER AND/OR REGISTERED PROFESSIONAL ENGINEER OF QUEENSLAND (RPEQ).

BRISBANE CITY COUNCIL STANDARD DRAWING

PRECAST TRAFFIC ISLAND
CODES AND DETAILS
SHEET 2 OF 2

PUBLISH DATE	SEP 2024
SCALE	NOT TO SCALE
DRAWING NUMBER	BSD-2061
ORIGINAL SIZE A3	REVISION C

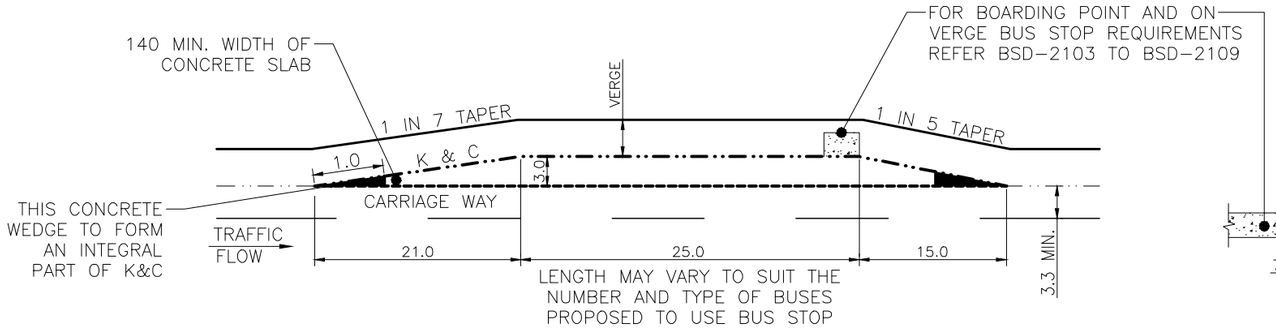

INDENTED BUS BAY – GEOMETRIC LAYOUT

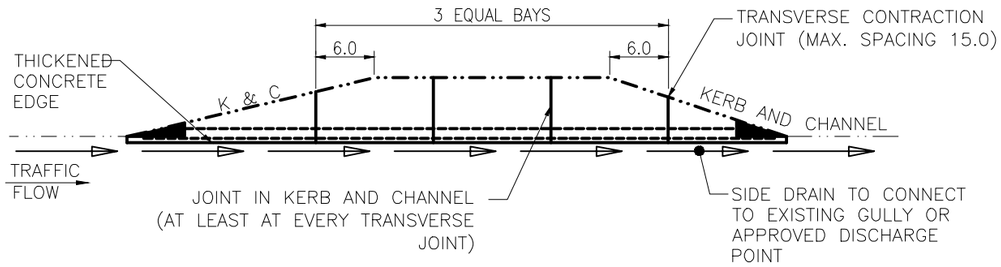

INDENTED BUS BAY – PAVEMENT JOINT LAYOUT

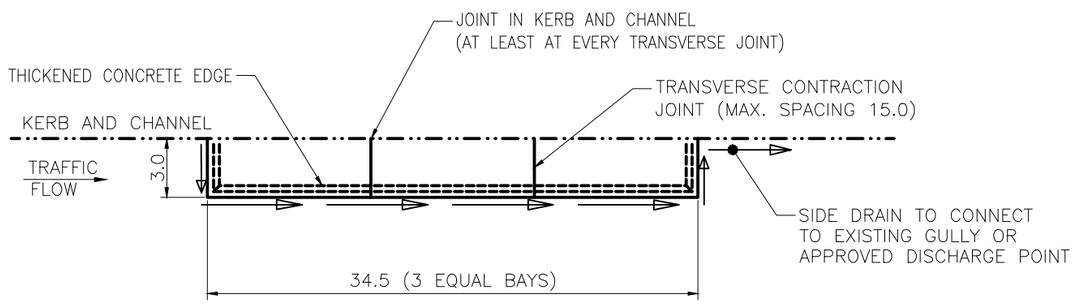

IN-LANE BUS BAY AND PAVEMENT JOINT LAYOUT

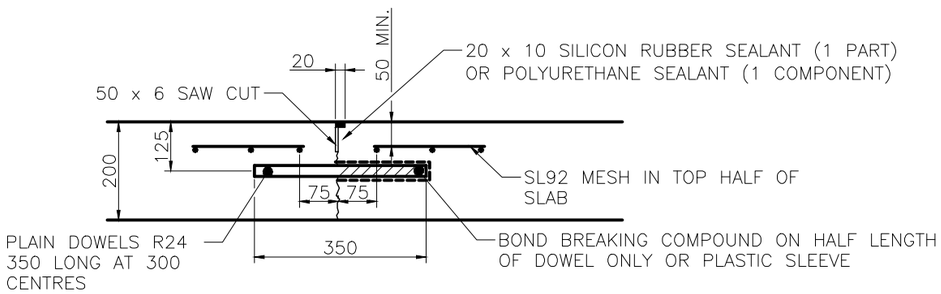

TRANSVERSE CONTRACTION JOINT

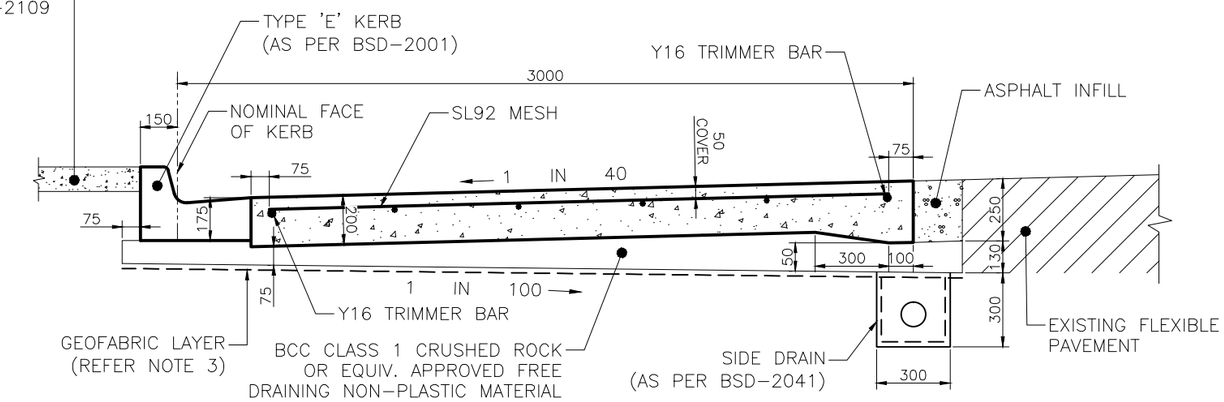

CONNECTION TO EXISTING FLEXIBLE PAVEMENT

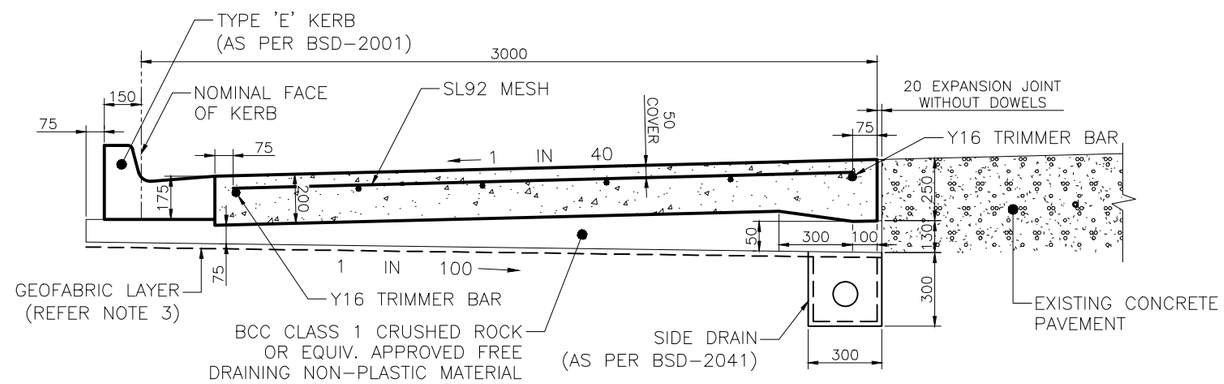

CONNECTION TO EXISTING CONCRETE PAVEMENT

NOTES:

1. THE SPECIFIED PAVEMENT STANDARD DOES NOT APPLY TO POOR SUBGRADE. REFER SUPPLEMENTARY NOTES FOR DETAIL.
2. THE PAVEMENT DESIGN ASSUMES A MINIMUM SUBGRADE CBR OF 5 (SOAKED 4 DAYS).
3. A GEOFABRIC LAYER (BCC TYPE 3 ie. BIDIM A49 OR EQUIVALENT) SHALL BE USED WHERE THE SUBGRADE CBR IS <3.0 AND FOR SILTY/CLAYEY SOILS.
4. BUS BAY CONCRETE TO BE GRADE N32.
5. CONCRETE TO BE BROOM FINISHED AND HAVE A MAXIMUM AGGREGATE SIZE OF 20mm.
6. REINFORCEMENT TO COMPLY WITH AS1303 FOR PLAIN BARS AND AS1304 FOR WELDED FABRIC. LAP MESH 400 AND TIE AT 500 SPACINGS.
7. WHERE A BUS BAY IS CONSTRUCTED ADJACENT TO AN EXISTING CONCRETE PAVEMENT, THE TRANSVERSE JOINTS IN THE BUS BAY SHALL LINE UP WITH THOSE IN THE EXISTING PAVEMENT.
8. IF A GULLY IS REQUIRED, IT SHOULD BE LOCATED SO AS TO INTERCEPT ANY WATER BEFORE IT REACHES THE BUS BAY.
9. ALTERNATIVE PAVEMENT DESIGNS MAY BE CONSIDERED FOR APPROVAL BY THE ASSET MANAGEMENT BRANCH UPON RECEIPT OF A FORMAL SUBMISSION BY A RPEQ.
10. DECIMALISED DIMENSIONS IN METRES, WHOLE NUMBER DIMENSIONS IN MILLIMETRES.

ISSUE	AMENDMENT	DRAWN DATE	CHK'D DATE	APPR'D DATE
B	Notes Amended January 2015	JAN '15	JAN '15	JAN '15
A	Drawing Converted from UMS Series April 2014	APR '14	APR '14	APR '14

DRAWING AUTHORISED FOR PUBLICATION
B.BALL SIGNATURE ON ORIGINAL
DATED 29/6/01 R.P.E.Q: 3 8 5 2
MANAGER ASSET SUPPORT

DESIGN APPROVED
B.HANSON SIGNATURE ON ORIGINAL
DATED 27/6/01
PRINCIPAL ASSET OFFICER
ROADS & DRAINAGE

DESIGN	STD DWG GROUP	DATE	April '01
DRAWN	CITY DESIGN	DATE	April '01
CHECKED	M.STEER	DATE	May '01
DRAWING FILENAME	BSD-2101 (B) Indented bus bay options standard crossfall.dwg		
ASSOCIATED PLANS	SUPERCEDES UMS-263		

BRISBANE CITY

BRISBANE CITY COUNCIL STANDARD DRAWING

INDENTED BUS BAY OPTIONS STANDARD CROSSFALL

SCALE: NOT TO SCALE
DWG No. BSD-2101
ORIGINAL SIZE: A3
REVISION: B

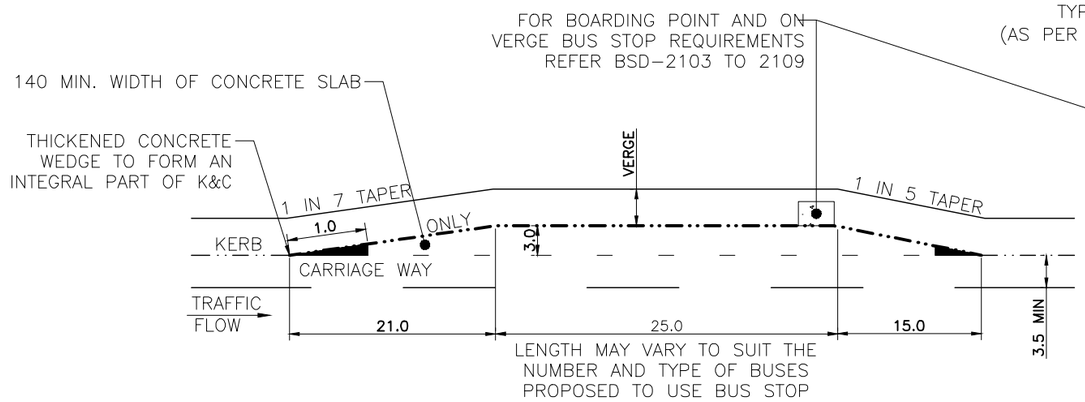

INDENTED BUS BAY – GEOMETRIC LAYOUT

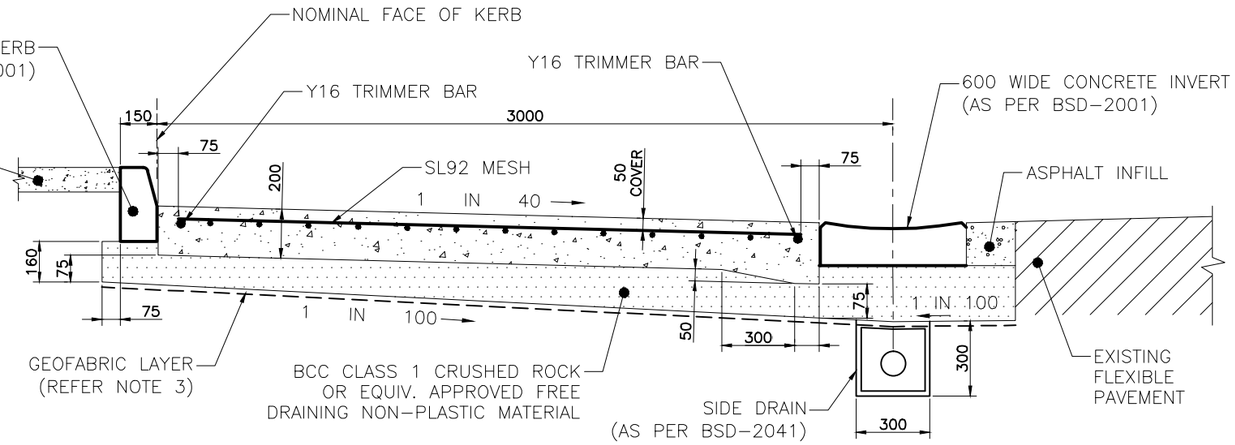

CONNECTION TO EXISTING FLEXIBLE PAVEMENT

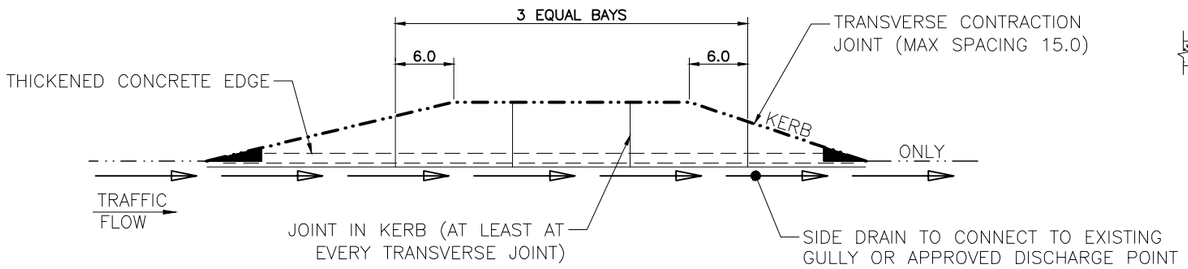

INDENTED BUS BAY – PAVEMENT JOINT LAYOUT

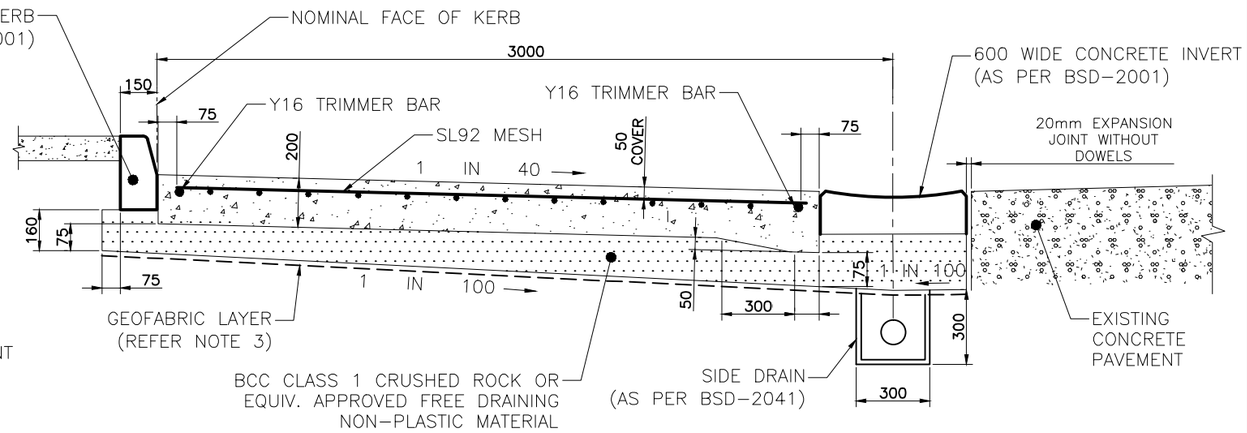

CONNECTION TO EXISTING CONCRETE PAVEMENT

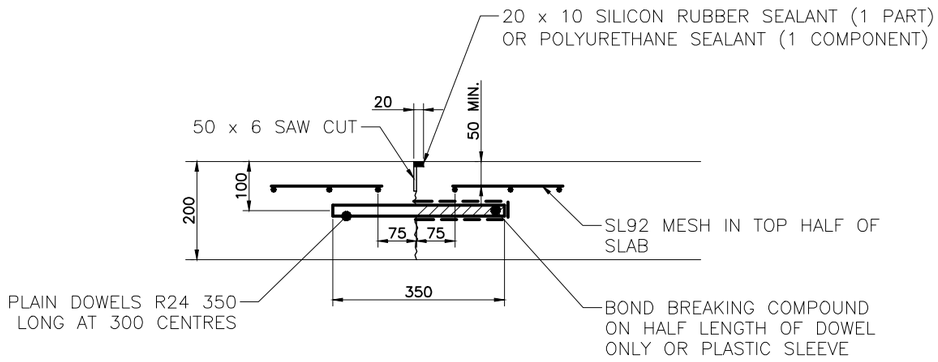

TRANSVERSE CONTRACTION JOINT

NOTES:

1. THE SPECIFIED PAVEMENT STANDARD DOES NOT APPLY TO POOR SUBGRADE. REFER SUPPLEMENTARY NOTES FOR DETAIL.
2. THE PAVEMENT DESIGN ASSUMES A MINIMUM SUBGRADE CBR OF 5 (SOAKED 4 DAYS).
3. A GEOFABRIC LAYER (BCC TYPE 3 ie. BIDIM A49 OR EQUIVALENT) SHALL BE USED WHERE THE SUBGRADE CBR IS <3.0 AND FOR SILTY/CLAYEY SOILS.
4. BUS BAY CONCRETE TO BE GRADE N32.
5. CONCRETE TO BE BROOM FINISHED AND HAVE A MAXIMUM AGGREGATE SIZE OF 20mm.
6. REINFORCEMENT TO COMPLY WITH AS1303 FOR PLAIN BARS AND AS1304 FOR WELDED FABRIC. LAP MESH 400 AND TIE AT 500 SPACINGS.
7. WHERE A BUS BAY IS CONSTRUCTED ADJACENT TO AN EXISTING CONCRETE PAVEMENT, THE TRANSVERSE JOINTS IN THE BUS BAY SHALL LINE UP WITH THOSE IN THE EXISTING PAVEMENT.
8. IF A GULLY IS REQUIRED, IT SHOULD BE LOCATED SO AS TO INTERCEPT ANY WATER BEFORE IT REACHES THE BUS BAY.
9. ALTERNATIVE PAVEMENT DESIGNS MAY BE CONSIDERED FOR APPROVAL BY THE ASSET MANAGEMENT BRANCH UPON RECEIPT OF A FORMAL SUBMISSION BY A RPEQ.
10. DECIMALISED DIMENSIONS IN METRES, WHOLE NUMBER DIMENSIONS IN MILLIMETRES.

ISSUE	AMENDMENT	DRAWN DATE	CHK'D DATE	APPR'D DATE
C	Drawing Title Amended	JAN '16	JUL '16	JUL '16
B	Notes Amended January 2015	JAN '15	JAN '15	JAN '15
A	Drawing Converted from UMS Series April 2014	APR '14	APR '14	APR '14

DRAWING AUTHORISED FOR PUBLICATION
B.BALL SIGNATURE ON ORIGINAL
DATED 29/6/01 R.P.E.Q: 3 8 5 2
MANAGER ASSET SUPPORT

DESIGN APPROVED
B.HANSON SIGNATURE ON ORIGINAL
DATED 27/6/01
PRINCIPAL ASSET OFFICER
ROADS & DRAINAGE

DESIGN	STD DWG GROUP	DATE	April '01
DRAWN	CITY DESIGN	DATE	April '01
CHECKED	M.STEER	DATE	May '01
DRAWING FILENAME	BSD-2102 (C) Indented bus bay options adverse crossfall.dwg		
ASSOCIATED PLANS	SUPERCEDES UMS-264		

BRISBANE CITY

BRISBANE CITY COUNCIL STANDARD DRAWING

INDENTED BUS BAY OPTIONS ADVERSE CROSSFALL

SCALE: NOT TO SCALE
DWG No.: BSD-2102
ORIGINAL SIZE: A3
REVISION: C

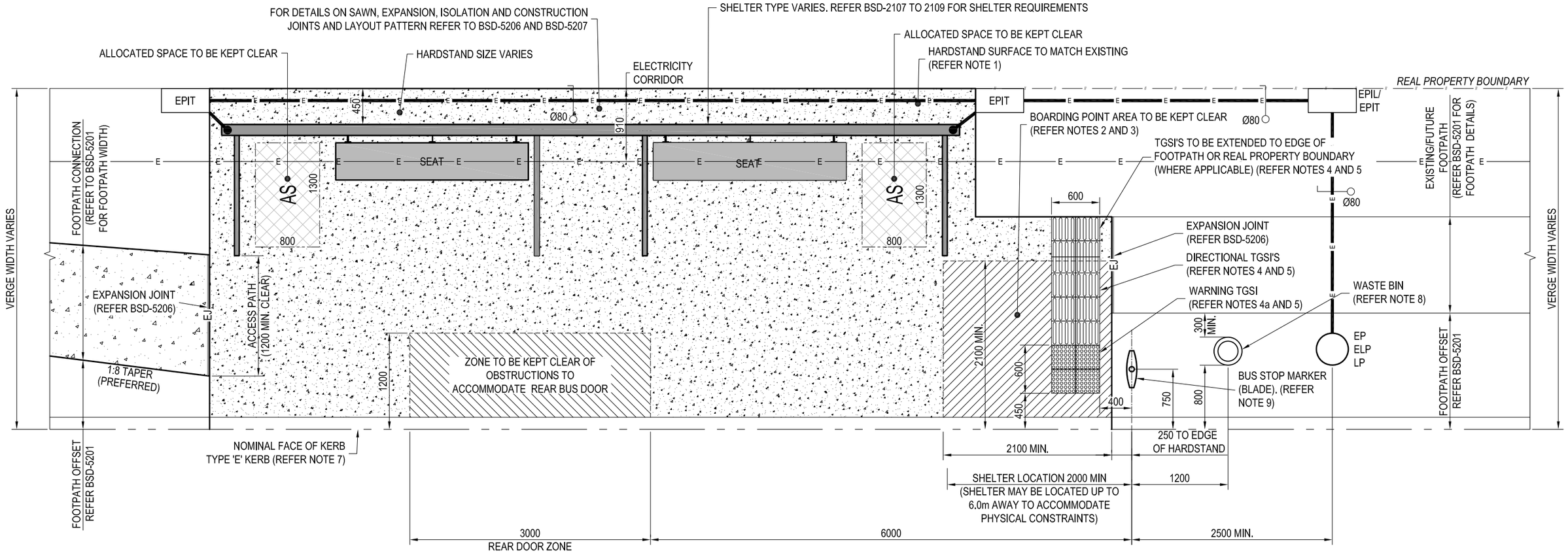

PREMIUM BUS STOP

NOTES:

1. CONCRETE, HARDSTANDS TO BE 125mm THICK GRADE N32 CONCRETE BROOM FINISHED SURFACE (FOR SLIP RESISTANCE). SL72 MESH PLACED CENTRALLY.
2. BOARDING POINT AREA TO HAVE CROSSFALL OF 1 IN 40 MAX. WHERE BOARDING POINT HAS A CROSSFALL OF GREATER THAN 1 IN 40, REFER TO COUNCIL FOR ALTERNATIVE OPTIONS.
3. LONGITUDINAL GRADE TO MATCH EXISTING ROAD.
4. CUTTING OF TGSI:
   a. NO WARNING TGSI SHALL BE CUT;
   b. CUTTING OF DIRECTIONAL TGSI SHALL BE KEPT TO A MINIMUM;
   c. WHERE DIRECTIONAL TGSI ARE TO BE CUT, THEY SHALL BE CUT IN ADJACENT PAIRS;
   d. THE MINIMUM LENGTH OF EACH OF THE CUT TGSI'S PAIRS SHALL NOT BE LESS THAN 150mm, MEASURED IN THE DIRECTION OF THE PATH OF TRAVEL;
   e. THE PAIR OF DIRECTIONAL TGSI AT THE END OF THE PATH OF TRAVEL SHALL NOT BE CUT.
5. TGSI TYPE, COLOUR AND INSTALLATION AS PER BSD-5218.
6. STORM WATER SOLUTION TO BE ASSESSED ON A SITE-BY-SITE BASIS.
7. TYPE 'E' KERB AS PER BSD-2001.
8. WASTE BIN TYPE TO BE APPROVED BY COUNCIL.
9. BLADE SIGN TO TRANSLINK BUS NETWORK INFRASTRUCTURE SIGNAGE MANUAL SIGN IS-10a.
10. DIMENSIONS IN MILLIMETRES (U.N.O.).
11. POINT OF SUPPLY PRIORITY:
    1. EP/ELP (ELECTRICITY POWER/LIGHT POLE)
    2. EPIL (ELECTRICITY PILLAR)
    3. EPIT (ELECTRICITY No.4 PIT)
    4. LP (STREET LIGHT POLE)

LIGHTING NOTES:

L1. ILLUMINATION WITHIN THE BUS SHELTER TO COMPLY WITH *AS/NZS1158.3.1* - LIGHTING FOR ROADS AND PUBLIC SPACES - PART 3.1: PEDESTRIAN AREA (CATEGORY P) LIGHTING - PERFORMANCE AND DESIGN REQUIREMENTS SUB CATEGORY PA1.

L2. LUMINAIRE/LIGHT IS TO BE POSITIONED AT THE FRONT OF THE SHELTER FROM THE ROOF, LIGHTING IS TO NOT ADVERSELY IMPACT ON THE ADJACENT TRAFFIC.

L3. LUMINAIRE IS TO BE PRE-WIRED INTO THE SHELTER .

L4. SWITCHBOARD FOR THE SHELTER IS TO BE LOCATED IN THE REAR POST. PE CELL IS TO BE LOCATED ON THE SAME POST IN A POSITION THAT WILL NOT BE IMPACTED BY LIGHTING IN THE PROXIMITY.

L5. LIGHT SOURCE IS TO BE LED WITH A CORRELATED COLOUR TEMPERATURE OF 4000K AND A COLOUR RENDERING INDEX (CRI) Ra ≥80.

L6. LED LUMINAIRES OR LAMPS USED FOR BRISBANE CITY COUNCIL SHALL COMPLY WITH THE FOLLOWING MINIMUM ENERGY PERFORMANCE STANDARDS (MEPS) EFFICACY REQUIREMENTS AS SHOWN IN TABLE 1. THE EFFICACY CALCULATION SHALL BE BASED ON INITIAL LUMINOUS FLUX MEASUREMENTS ACCORDING TO CIE S 025/E (OR IES LM-79).

L7. THE LUMINAIRE DISTRIBUTOR SHOULD ALSO SUPPLY PHOTOMETRIC DATA (IN IES AND/OR CIE FORMAT) FROM A NATA ACCREDITED LABORATORY OR A LABORATORY, WHOSE ACCREDITATION IS RECOGNISED BY NATA UNDER THE MUTUAL RECOGNITION SCHEME.

L8. THERE IS NO REQUIREMENT FOR ADDITIONAL PUBLIC SAFETY LIGHT (STREET LIGHT) NEAR A BUS SHELTER, OVER AND ABOVE LIGHTING REQUIRED TO COMPLY WITH *AS/NZS1158*.

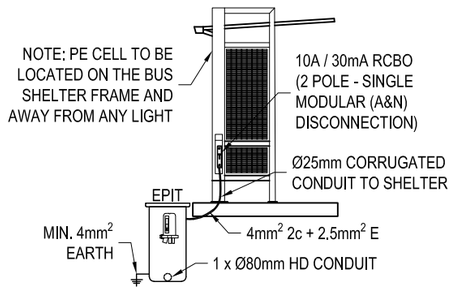

PIT TO SHELTER ELECTRICAL CONNECTION

N.T.S.

TABLE 1: LED LUMINAIRES EFFICACY REQUIREMENTS

	LED LAMPS		LED LUMINAIRES (SMALL)	LED PLANAR, BATTENS & TROFFERS
	DIRECTIONAL & NON-DIRECTIONAL LAMPS	LINEAR LED (TUBE)	LUMINOUS FLUX ≥100 lm & <2,500 lm	LUMINOUS FLUX: ≥2,500 lm & <5,000 lm
EFFICACY	≥65 lm/W	≥100 lm/W	≥65 lm/W	≥90 lm/W

BRISBANE CITY

BRISBANE CITY COUNCIL STANDARD DRAWING

PREMIUM BUS STOP

PUBLISH DATE	MAR 2021
SCALE	NOT TO SCALE
DRAWING NUMBER	BSD-2103
ORIGINAL SIZE	A3
REVISION	F

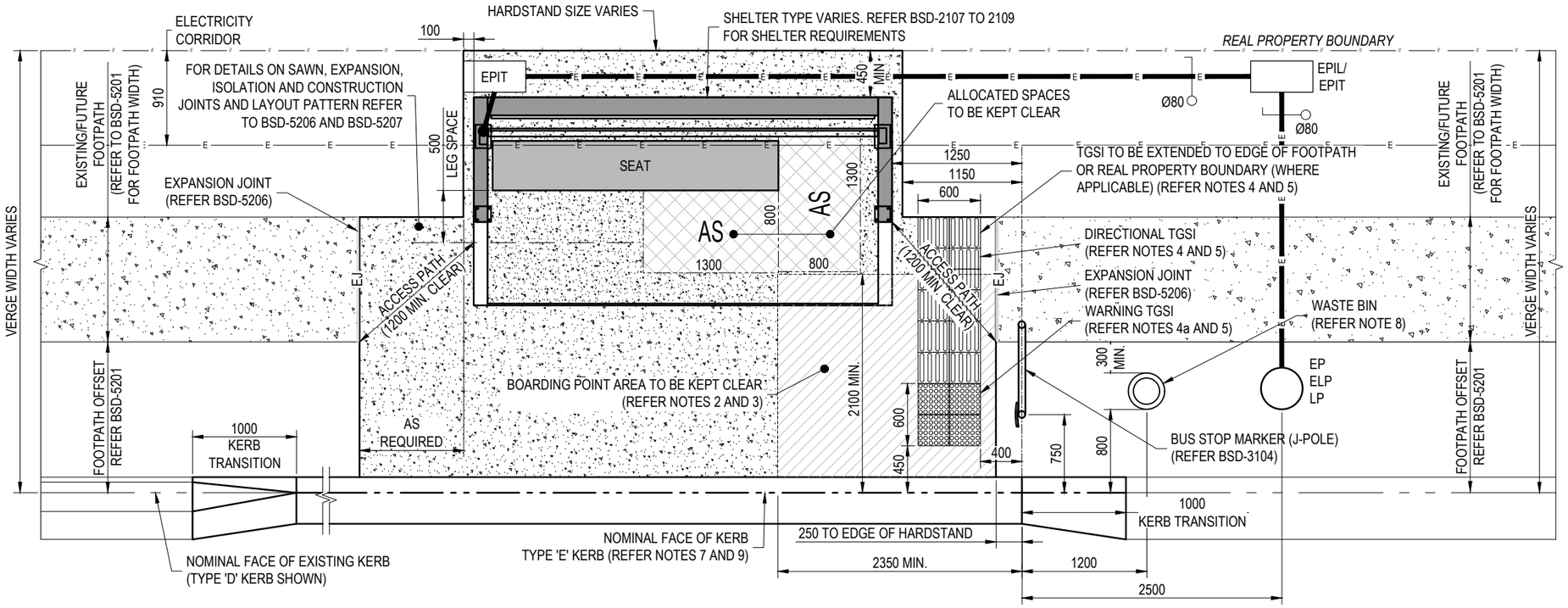

INTERMEDIATE BUS STOP - CONSTRAINED SITE

NOTES:

1. REFER BSD-2103 FOR CONCRETE HARDSTAND DETAILS (WHERE APPLICABLE). HARDSTAND FINISH TO MATCH SURROUNDING AREA FINISH.
2. BOARDING POINT AREA TO HAVE CROSSFALL OF 1 IN 40 MAX. WHERE BOARDING POINT HAS A CROSSFALL OF GREATER THAN 1 IN 40, REFER TO COUNCIL FOR ALTERNATIVE OPTIONS.
3. LONGITUDINAL GRADE TO MATCH EXISTING ROAD.
4. CUTTING OF TGSI:
   a. NO WARNING TGSI SHALL BE CUT;
   b. CUTTING OF DIRECTIONAL TGSI SHALL BE KEPT TO A MINIMUM;
   c. WHERE DIRECTIONAL TGSI ARE TO BE CUT, THEY SHALL BE CUT IN ADJACENT PAIRS;
   d. THE MINIMUM LENGTH OF EACH OF THE CUT TGSI'S PAIRS SHALL NOT BE LESS THAN 150mm, MEASURED IN THE DIRECTION OF THE PATH OF TRAVEL;
   e. THE PAIR OF DIRECTIONAL TGSI AT THE END OF THE PATH OF TRAVEL SHALL NOT BE CUT.
5. TGSI TYPE, COLOUR AND INSTALLATION AS PER BSD-5218.
6. STORM WATER SOLUTION TO BE ASSESSED ON A SITE-BY-SITE BASIS.
7. MODIFY EXISTING KERB ON APPROACH SIDE OF THE BUS STOP TO ENSURE SAFE ALIGHTING FROM BUSES:
   - FOR 12.5m AND 14.5m BUSES: 9m OF TYPE 'E' KERB;
   - FOR 18m BUSES: 14m TYPE 'E' KERB;
   - CONSTRUCT 1.0m TRANSITION AT EACH END.
8. WASTE BIN TO BE APPROVED BY COUNCIL.
9. TYPE 'E' KERB AS PER BSD-2001.
10. BLADE SIGN TO TRANSLINK BUS NETWORK INFRASTRUCTURE SIGNAGE MANUAL SIGN IS-10a.
11. CENTRES ARE LAND ZONED AS CENTRE BY BRISBANE CITY PLAN 2014 AND INFRASTRUCTURE DESIGN PLANNING SCHEME POLICY.
12. DIMENSIONS IN MILLIMETRES (U.N.O.).
13. POINT OF SUPPLY PRIORITY:
    1. EP/ELP (ELECTRICITY POWER/LIGHT POLE)
    2. EPIL (ELECTRICITY PILLAR)
    3. EPIT (ELECTRICITY No.4 PIT)
    4. LP (STREET LIGHT POLE)

LIGHTING NOTES:

L1. ILLUMINATION WITHIN THE BUS SHELTER TO COMPLY WITH *AS/NZS1158.3.1* - LIGHTING FOR ROADS AND PUBLIC SPACES - PART 3.1: PEDESTRIAN AREA (CATEGORY P) LIGHTING - PERFORMANCE AND DESIGN REQUIREMENTS SUB CATEGORY PA1.

L2. LUMINAIRE/LIGHT IS TO BE POSITIONED AT THE FRONT OF THE SHELTER FROM THE ROOF, LIGHTING IS TO NOT ADVERSELY IMPACT ON THE ADJACENT TRAFFIC.

L3. LUMINAIRE IS TO BE PRE-WIRED INTO THE SHELTER .

L4. SWITCHBOARD FOR THE SHELTER IS TO BE LOCATED IN THE REAR POST. PE CELL IS TO BE LOCATED ON THE SAME POST IN A POSITION THAT WILL NOT BE IMPACTED BY LIGHTING IN THE PROXIMITY.

L5. LIGHT SOURCE IS TO BE LED WITH A CORRELATED COLOUR TEMPERATURE OF 4000K AND A COLOUR RENDERING INDEX (CRI) Ra ≥80.

L6. LED LUMINAIRES OR LAMPS USED FOR BRISBANE CITY COUNCIL SHALL COMPLY WITH THE FOLLOWING MINIMUM ENERGY PERFORMANCE STANDARDS (MEPS) EFFICACY REQUIREMENTS AS SHOWN IN TABLE 1. THE EFFICACY CALCULATION SHALL BE BASED ON INITIAL LUMINOUS FLUX MEASUREMENTS ACCORDING TO CIE S 025/E (OR IES LM-79).

L7. THE LUMINAIRE DISTRIBUTOR SHOULD ALSO SUPPLY PHOTOMETRIC DATA (IN IES AND/OR CIE FORMAT) FROM A NATA ACCREDITED LABORATORY OR A LABORATORY, WHOSE ACCREDITATION IS RECOGNISED BY NATA UNDER THE MUTUAL RECOGNITION SCHEME.

L8. THERE IS NO REQUIREMENT FOR ADDITIONAL PUBLIC SAFETY LIGHT (STREET LIGHT) NEAR A BUS SHELTER, OVER AND ABOVE LIGHTING REQUIRED TO COMPLY WITH *AS/NZS1158.*

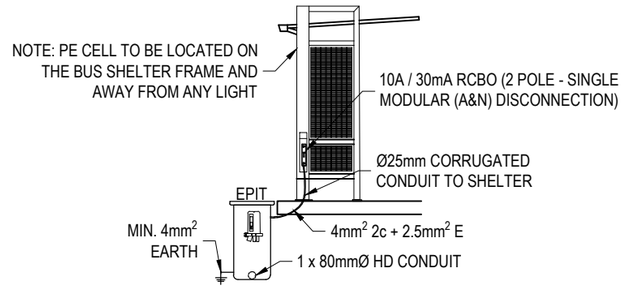

PIT TO SHELTER ELECTRICAL CONNECTION

N.T.S.

TABLE 1: LED LUMINAIRES EFFICACY REQUIREMENTS

	LED LAMPS		LED LUMINAIRES (SMALL)	LED PLANAR, BATTENS & TROFFERS
	DIRECTIONAL & NON-DIRECTIONAL LAMPS	LINEAR LED (TUBE)	LUMINOUS FLUX ≥100 lm & <2,500 lm	LUMINOUS FLUX: ≥2,500 lm & <5,000 lm
EFFICACY	≥65 lm/W	≥100 lm/W	≥65 lm/W	≥90 lm/W

BRISBANE CITY

BRISBANE CITY COUNCIL STANDARD DRAWING

INTERMEDIATE BUS STOP - CONSTRAINED SITE
SHEET 3 OF 3

PUBLISH DATE	MAR 2021
SCALE	NOT TO SCALE
DRAWING NUMBER	BSD-2104
ORIGINAL SIZE	A3
REVISION	E

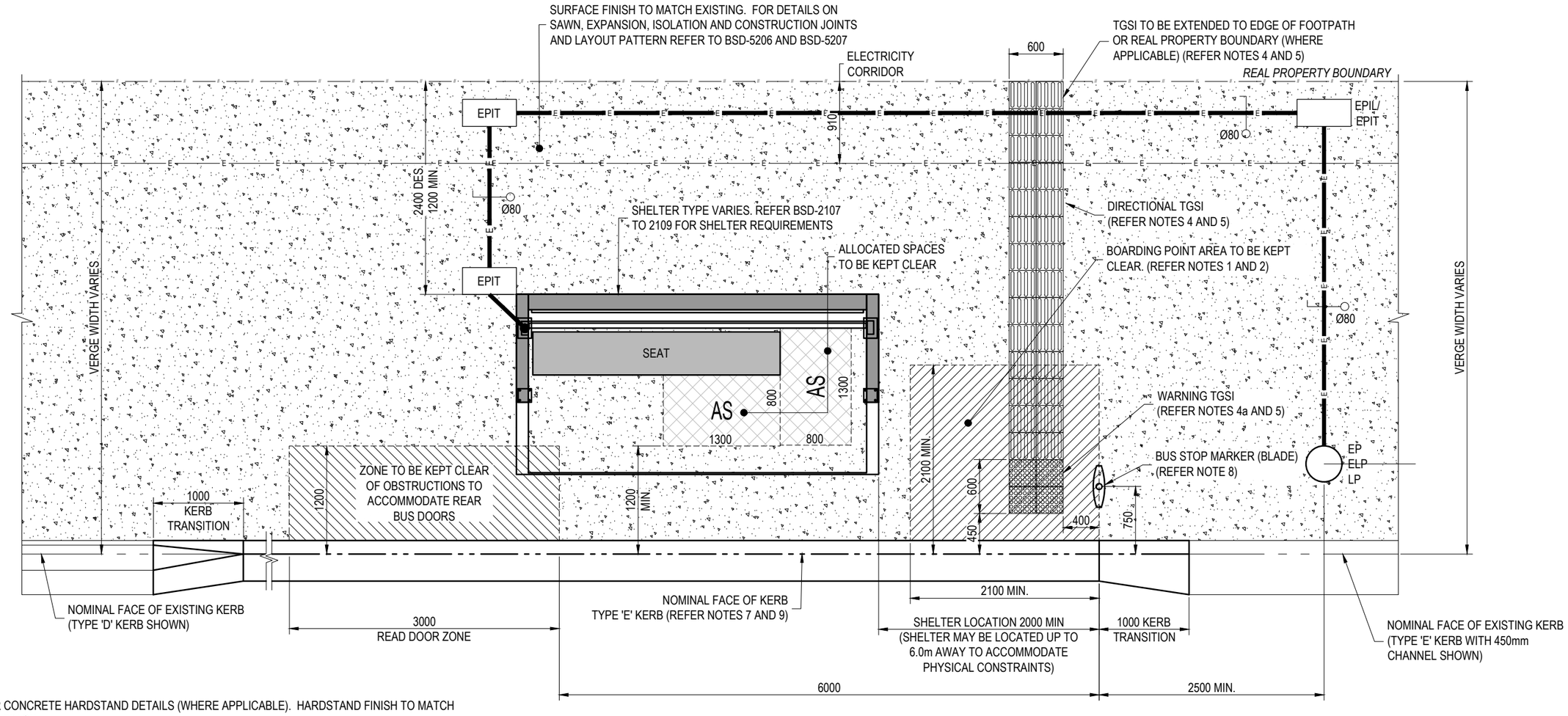

NOTES:

1. REFER BSD-2103 FOR CONCRETE HARDSTAND DETAILS (WHERE APPLICABLE). HARDSTAND FINISH TO MATCH SURROUNDING AREA FINISH.
2. BOARDING POINT AREA TO HAVE CROSSFALL OF 1 IN 40 MAX. WHERE BOARDING POINT HAS A CROSSFALL OF GREATER THAN 1 IN 40, REFER TO COUNCIL FOR ALTERNATIVE OPTIONS.
3. LONGITUDINAL GRADE TO MATCH EXISTING ROAD.
4. CUTTING OF TGSI:
   a. NO WARNING TGSI SHALL BE CUT;
   b. CUTTING OF DIRECTIONAL TGSI SHALL BE KEPT TO A MINIMUM;
   c. WHERE DIRECTIONAL TGSI ARE TO BE CUT, THEY SHALL BE CUT IN ADJACENT PAIRS;
   d. THE MINIMUM LENGTH OF EACH OF THE CUT TGSI'S PAIRS SHALL NOT BE LESS THAN 150mm, MEASURED IN THE DIRECTION OF THE PATH OF TRAVEL;
   e. THE PAIR OF DIRECTIONAL TGSI AT THE END OF THE PATH OF TRAVEL SHALL NOT BE CUT.
5. TGSI TYPE, COLOUR AND INSTALLATION AS PER BSD-5218.
6. STORM WATER SOLUTION TO BE ASSESSED ON A SITE-BY-SITE BASIS.
7. MODIFY EXISTING KERB ON APPROACH SIDE OF THE BUS STOP TO ENSURE SAFE ALIGHTING FROM BUSES:
   - FOR 12.5m AND 14.5m BUSES: 9m OF TYPE 'E' KERB;
   - FOR 18m BUSES: 14m TYPE 'E' KERB;
   - CONSTRUCT 1.0m TRANSITION AT EACH END.
8. WASTE BIN TO BE APPROVED BY COUNCIL.
9. TYPE 'E' KERB AS PER BSD-2001.
10. BLADE SIGN TO TRANSLINK BUS NETWORK INFRASTRUCTURE SIGNAGE MANUAL SIGN IS-10a.
11. CENTRES ARE LAND ZONED AS CENTRE BY BRISBANE CITY PLAN 2014 AND INFRASTRUCTURE DESIGN PLANNING SCHEME POLICY.
12. DIMENSIONS IN MILLIMETRES (U.N.O.).
13. POINT OF SUPPLY PRIORITY:
    1. EP/ELP (ELECTRICITY POWER/LIGHT POLE)
    2. EPIL (ELECTRICITY PILLAR)
    3. EPIT (ELECTRICITY No.4 PIT)
    4. LP (STREET LIGHT POLE)

INTERMEDIATE BUS STOP IN CENTRES

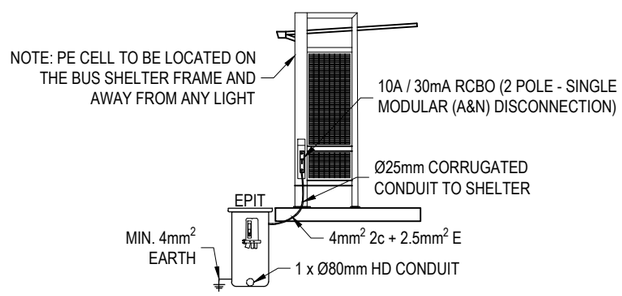

PIT TO SHELTER ELECTRICAL CONNECTION

N.T.S.

LIGHTING NOTES:

L1. ILLUMINATION WITHIN THE BUS SHELTER TO COMPLY WITH A*S/NZS1158.3.1* - LIGHTING FOR ROADS AND PUBLIC SPACES - PART 3.1: PEDESTRIAN AREA (CATEGORY P) LIGHTING - PERFORMANCE AND DESIGN REQUIREMENTS SUB CATEGORY PA1.

L2. LUMINAIRE/LIGHT IS TO BE POSITIONED AT THE FRONT OF THE SHELTER FROM THE ROOF, LIGHTING IS TO NOT ADVERSELY IMPACT ON THE ADJACENT TRAFFIC.

L3. LUMINAIRE IS TO BE PRE-WIRED INTO THE SHELTER .

L4. SWITCHBOARD FOR THE SHELTER IS TO BE LOCATED IN THE REAR POST. PE CELL IS TO BE LOCATED ON THE SAME POST IN A POSITION THAT WILL NOT BE IMPACTED BY LIGHTING IN THE PROXIMITY.

L5. LIGHT SOURCE IS TO BE LED WITH A CORRELATED COLOUR TEMPERATURE OF 4000K AND A COLOUR RENDERING INDEX (CRI) Ra ≥80.

L6. LED LUMINAIRES OR LAMPS USED FOR BRISBANE CITY COUNCIL SHALL COMPLY WITH THE FOLLOWING MINIMUM ENERGY PERFORMANCE STANDARDS (MEPS) EFFICACY REQUIREMENTS AS SHOWN IN TABLE 1. THE EFFICACY CALCULATION SHALL BE BASED ON INITIAL LUMINOUS FLUX MEASUREMENTS ACCORDING TO CIE S 025/E (OR IES LM-79).

L7. THE LUMINAIRE DISTRIBUTOR SHOULD ALSO SUPPLY PHOTOMETRIC DATA (IN IES AND/OR CIE FORMAT) FROM A NATA ACCREDITED LABORATORY OR A LABORATORY, WHOSE ACCREDITATION IS RECOGNISED BY NATA UNDER THE MUTUAL RECOGNITION SCHEME.

L8. THERE IS NO REQUIREMENT FOR ADDITIONAL PUBLIC SAFETY LIGHT (STREET LIGHT) NEAR A BUS SHELTER, OVER AND ABOVE LIGHTING REQUIRED TO COMPLY WITH *AS/NZS1158*.

TABLE 1: LED LUMINAIRES EFFICACY REQUIREMENTS

	LED LAMPS		LED LUMINAIRES (SMALL)	LED PLANAR, BATTENS & TROFFERS
	DIRECTIONAL & NON-DIRECTIONAL LAMPS	LINEAR LED (TUBE)	LUMINOUS FLUX ≥100 lm & <2,500 lm	LUMINOUS FLUX: ≥2,500 lm & <5,000 lm
EFFICACY	≥65 lm/W	≥100 lm/W	≥65 lm/W	≥90 lm/W

BRISBANE CITY

BRISBANE CITY COUNCIL STANDARD DRAWING

INTERMEDIATE BUS STOP IN CENTRES SHEET 2 OF 3

PUBLISH DATE	MAR 2021
SCALE	NOT TO SCALE
DRAWING NUMBER	BSD-2104
ORIGINAL SIZE	A3
REVISION	E

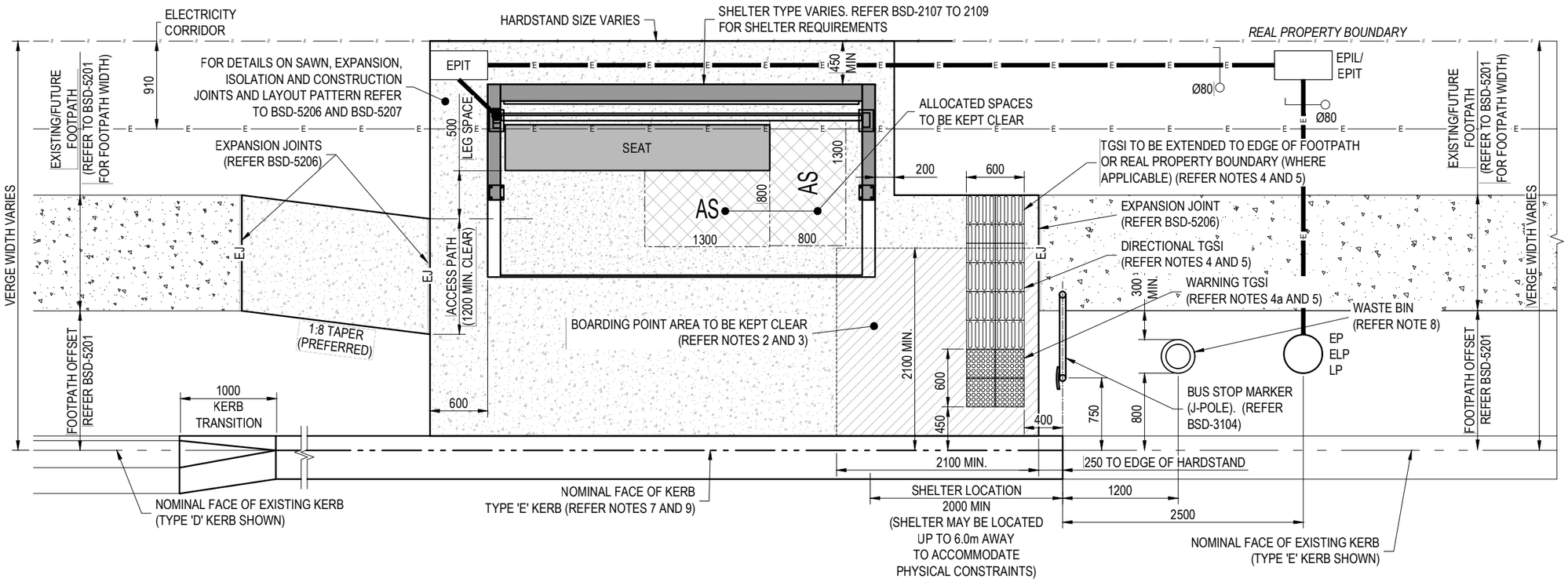

INTERMEDIATE BUS STOP - PREFERRED

NOTES:

1. REFER BSD-2103 FOR CONCRETE HARDSTAND DETAILS (WHERE APPLICABLE). HARDSTAND FINISH TO MATCH SURROUNDING AREA FINISH.
2. BOARDING POINT AREA TO HAVE CROSSFALL OF 1 IN 40 MAX. WHERE BOARDING POINT HAS A CROSSFALL OF GREATER THAN 1 IN 40, REFER TO COUNCIL FOR ALTERNATIVE OPTIONS.
3. LONGITUDINAL GRADE TO MATCH EXISTING ROAD.
4. CUTTING OF TGSI:
   a. NO WARNING TGSI SHALL BE CUT;
   b. CUTTING OF DIRECTIONAL TGSI SHALL BE KEPT TO A MINIMUM;
   c. WHERE DIRECTIONAL TGSI ARE TO BE CUT, THEY SHALL BE CUT IN ADJACENT PAIRS;
   d. THE MINIMUM LENGTH OF EACH OF THE CUT TGSI'S PAIRS SHALL NOT BE LESS THAN 150mm, MEASURED IN THE DIRECTION OF THE PATH OF TRAVEL;
   e. THE PAIR OF DIRECTIONAL TGSI AT THE END OF THE PATH OF TRAVEL SHALL NOT BE CUT.
5. TGSI TYPE, COLOUR AND INSTALLATION AS PER BSD-5218.
6. STORM WATER SOLUTION TO BE ASSESSED ON A SITE-BY-SITE BASIS.
7. MODIFY EXISTING KERB ON APPROACH SIDE OF THE BUS STOP TO ENSURE SAFE ALIGHTING FROM BUSES:
   - FOR 12.5m AND 14.5m BUSES: 9m OF TYPE 'E' KERB;
   - FOR 18m BUSES: 14m TYPE 'E' KERB;
   - CONSTRUCT 1.0m TRANSITION AT EACH END.
8. WASTE BIN TO BE APPROVED BY COUNCIL.
9. TYPE 'E' KERB AS PER BSD-2001.
10. BLADE SIGN TO TRANSLINK BUS NETWORK INFRASTRUCTURE SIGNAGE MANUAL SIGN IS-10a.
11. CENTRES ARE LAND ZONED AS CENTRE BY BRISBANE CITY PLAN 2014 AND INFRASTRUCTURE DESIGN PLANNING SCHEME POLICY.
12. DIMENSIONS IN MILLIMETRES (U.N.O.).
13. POINT OF SUPPLY PRIORITY:
    1. EP/ELP (ELECTRICITY POWER/LIGHT POLE)
    2. EPIL (ELECTRICITY PILLAR)
    3. EPIT (ELECTRICITY No.4 PIT)
    4. LP (STREET LIGHT POLE)

LIGHTING NOTES:

L1. ILLUMINATION WITHIN THE BUS SHELTER TO COMPLY WITH *AS/NZS1158.3.1* - LIGHTING FOR ROADS AND PUBLIC SPACES - PART 3.1: PEDESTRIAN AREA (CATEGORY P) LIGHTING - PERFORMANCE AND DESIGN REQUIREMENTS SUB CATEGORY PA1.

L2. LUMINAIRE/LIGHT IS TO BE POSITIONED AT THE FRONT OF THE SHELTER FROM THE ROOF, LIGHTING IS TO NOT ADVERSELY IMPACT ON THE ADJACENT TRAFFIC.

L3. LUMINAIRE IS TO BE PRE-WIRED INTO THE SHELTER .

L4. SWITCHBOARD FOR THE SHELTER IS TO BE LOCATED IN THE REAR POST. PE CELL IS TO BE LOCATED ON THE SAME POST IN A POSITION THAT WILL NOT BE IMPACTED BY LIGHTING IN THE PROXIMITY.

L5. LIGHT SOURCE IS TO BE LED WITH A CORRELATED COLOUR TEMPERATURE OF 4000K AND A COLOUR RENDERING INDEX (CRI) Ra ≥80.

L6. LED LUMINAIRES OR LAMPS USED FOR BRISBANE CITY COUNCIL SHALL COMPLY WITH THE FOLLOWING MINIMUM ENERGY PERFORMANCE STANDARDS (MEPS) EFFICACY REQUIREMENTS AS SHOWN IN TABLE 1. THE EFFICACY CALCULATION SHALL BE BASED ON INITIAL LUMINOUS FLUX MEASUREMENTS ACCORDING TO CIE S 025/E (OR IES LM-79).

L7. THE LUMINAIRE DISTRIBUTOR SHOULD ALSO SUPPLY PHOTOMETRIC DATA (IN IES AND/OR CIE FORMAT) FROM A NATA ACCREDITED LABORATORY OR A LABORATORY, WHOSE ACCREDITATION IS RECOGNISED BY NATA UNDER THE MUTUAL RECOGNITION SCHEME.

L8. THERE IS NO REQUIREMENT FOR ADDITIONAL PUBLIC SAFETY LIGHT (STREET LIGHT) NEAR A BUS SHELTER, OVER AND ABOVE LIGHTING REQUIRED TO COMPLY WITH *AS/NZS1158*.

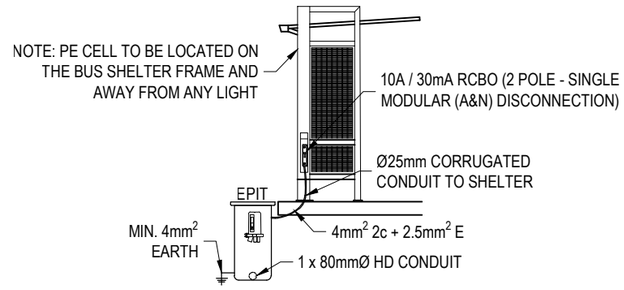

PIT TO SHELTER ELECTRICAL CONNECTION

N.T.S.

TABLE 1: LED LUMINAIRES EFFICACY REQUIREMENTS

	LED LAMPS		LED LUMINAIRES (SMALL)	LED PLANAR, BATTENS & TROFFERS
	DIRECTIONAL & NON-DIRECTIONAL LAMPS	LINEAR LED (TUBE)	LUMINOUS FLUX ≥100 lm & <2,500 lm	LUMINOUS FLUX: ≥2,500 lm & <5,000 lm
EFFICACY	≥65 lm/W	≥100 lm/W	≥65 lm/W	≥90 lm/W

BRISBANE CITY

BRISBANE CITY COUNCIL STANDARD DRAWING

INTERMEDIATE BUS STOP
PREFERRED LAYOUT
SHEET 1 OF 3

PUBLISH DATE	MAR 2021
SCALE	NOT TO SCALE
DRAWING NUMBER	BSD-2104
ORIGINAL SIZE	A3
REVISION	E

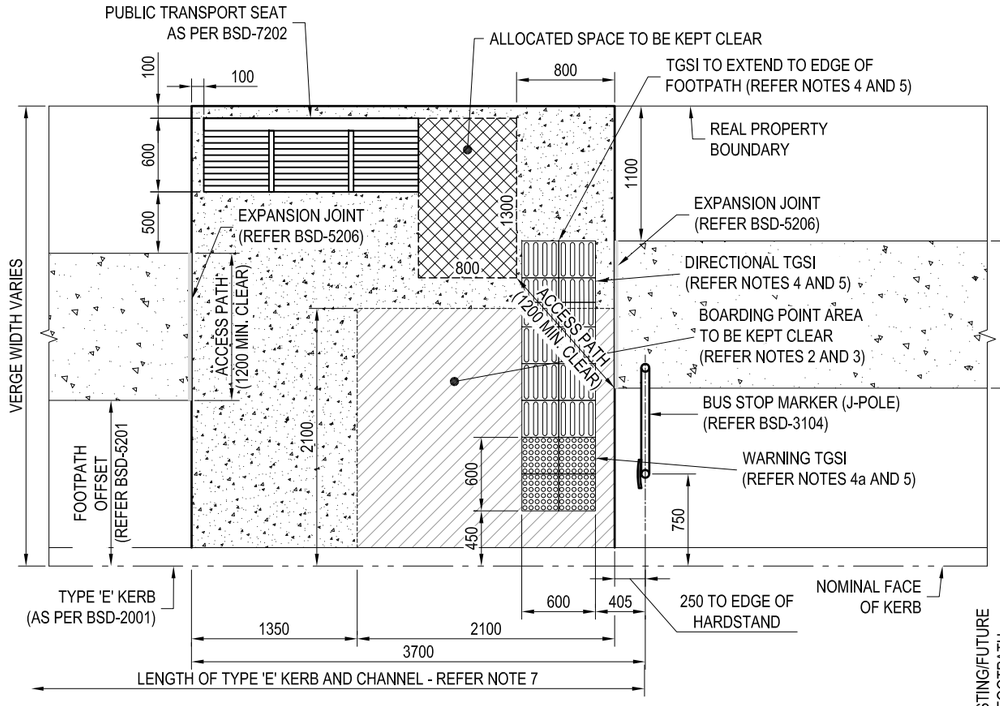

REGULAR BUS STOP WITH SEAT PREFERRED

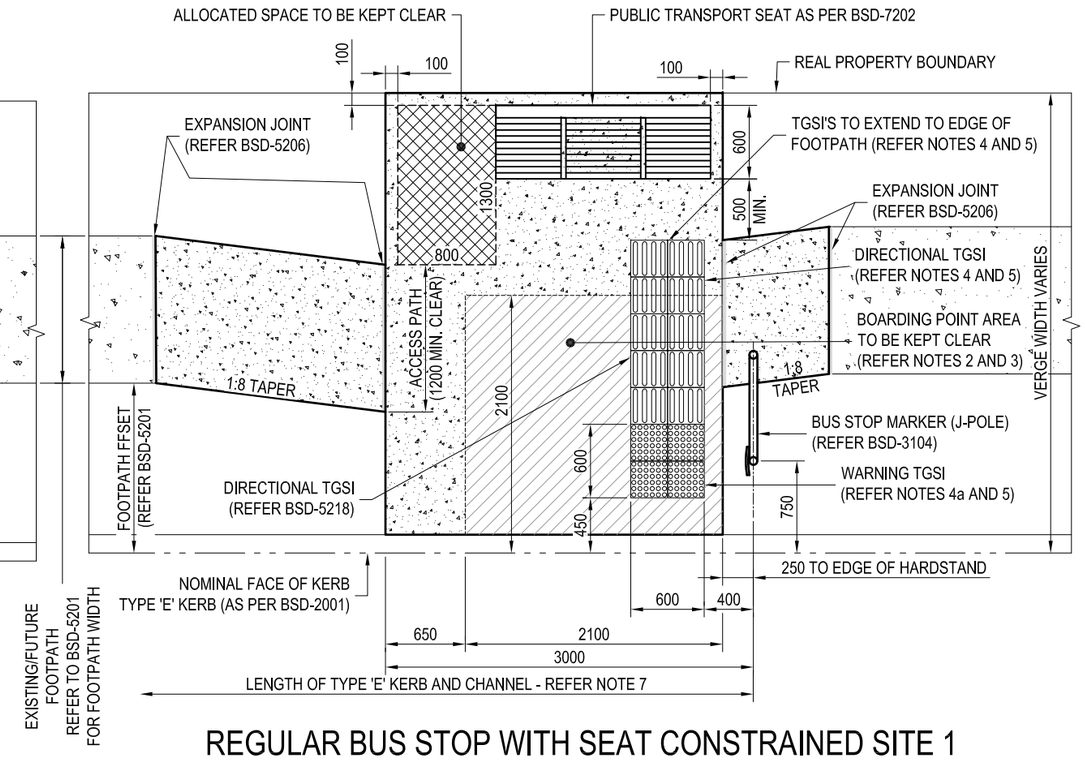

REGULAR BUS STOP WITH SEAT CONSTRAINED SITE 1

EXISTING/FUTURE FOOTPATH REFER TO BSD-5201 FOR FOOTPATH WIDTH

NOTES:

1. HARDSTANDS TO BE 125mm THICK SURFACE BROOM FINISHED (FOR SLIP RESISTANCE) GRADE N32 CONCRETE. SL72 MESH PLACED CENTRALLY.
2. BOARDING POINT AREA TO HAVE CROSSFALL OF 1 IN 40 MAX. WHERE BOARDING POINT HAS A CROSSFALL OF GREATER THAN 1 IN 40, REFER TO COUNCIL FOR ALTERNATIVE OPTIONS.
3. LONGITUDINAL GRADE TO MATCH EXISTING ROAD.
4. CUTTING OF TGSI:
   a. NO WARNING TGSI SHALL BE CUT;
   b. CUTTING OF DIRECTIONAL TGSI SHALL BE KEPT TO A MINIMUM;
   c. WHERE DIRECTIONAL TGSI ARE TO BE CUT, THEY SHALL BE CUT IN ADJACENT PAIRS;
   d. THE MINIMUM LENGTH OF EACH OF THE CUT TGSI'S PAIRS SHALL NOT BE LESS THAN 150mm, MEASURED IN THE DIRECTION OF THE PATH OF TRAVEL;
   e. THE PAIR OF DIRECTIONAL TGSI AT THE END OF THE PATH OF TRAVEL SHALL NOT BE CUT.
5. TGSI TYPE, COLOUR AND INSTALLATION AS PER BSD-5218.
6. STORM WATER SOLUTION TO BE ASSESSED ON A SITE-BY-SITE BASIS.
7. MODIFY EXISTING KERB ON APPROACH SIDE OF THE BUS STOP TO ENSURE SAFE ALIGHTING FROM BUSES:
   - FOR 12.5m AND 14.5m BUSES: 9m OF TYPE 'E' KERB;
   - FOR 18m BUSES: 14m TYPE 'E' KERB
   - CONSTRUCT 1.0m TRANSITION AT EACH END.
7. TYPE 'E' KERB AS PER BSD-2001.
8. DIMENSIONS IN MILLIMETRES (U.N.O.).

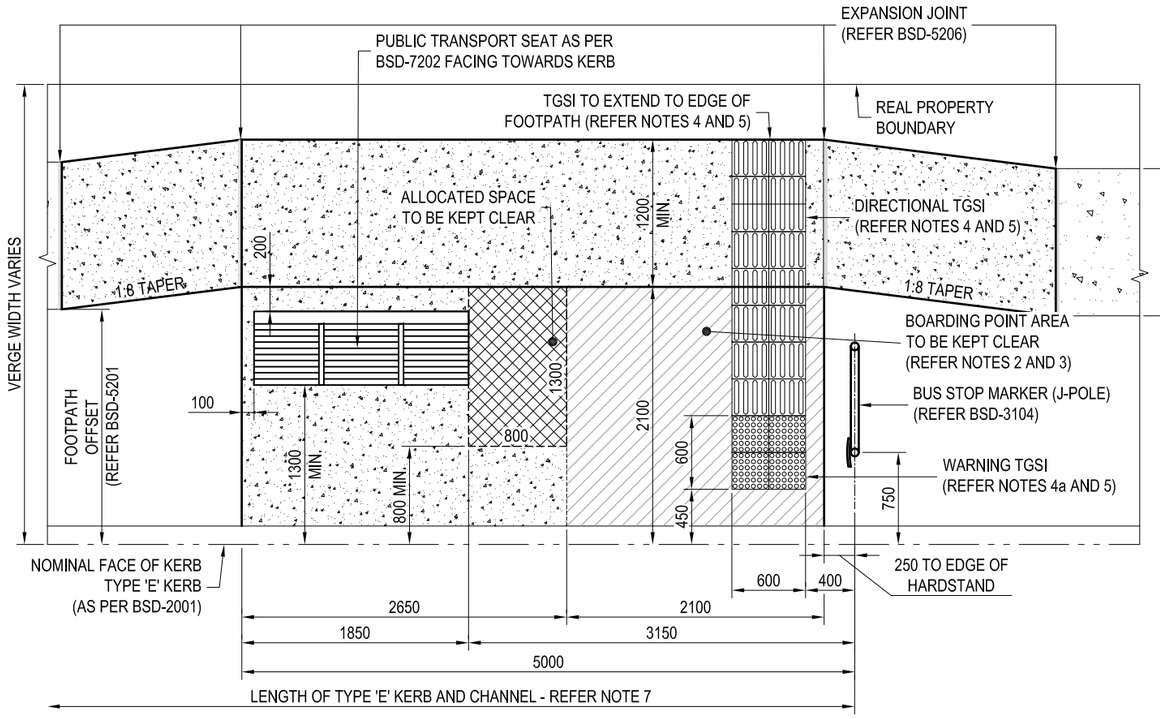

REGULAR BUS STOP WITH SEAT CONSTRAINED SITE 2

EXISTING/FUTURE FOOTPATH REFER TO BSD-5201 FOR FOOTPATH WIDTH

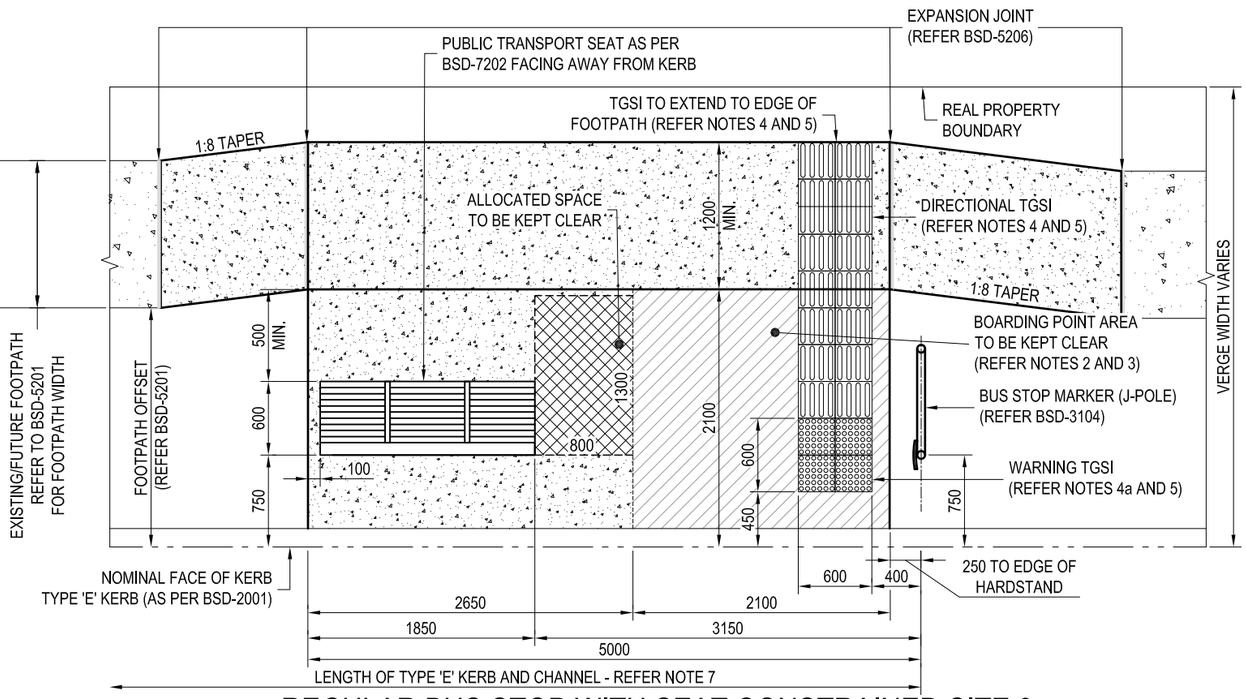

REGULAR BUS STOP WITH SEAT CONSTRAINED SITE 3

BRISBANE CITY	BRISBANE CITY COUNCIL STANDARD DRAWING	PUBLISH DATE: NOV 2019
	REGULAR BUS STOP - WITH SEAT - SHEET 2 OF 3	SCALE: NOT TO SCALE
		DRAWING NUMBER: BSD-2105
		ORIGINAL SIZE: A3 / REVISION: B

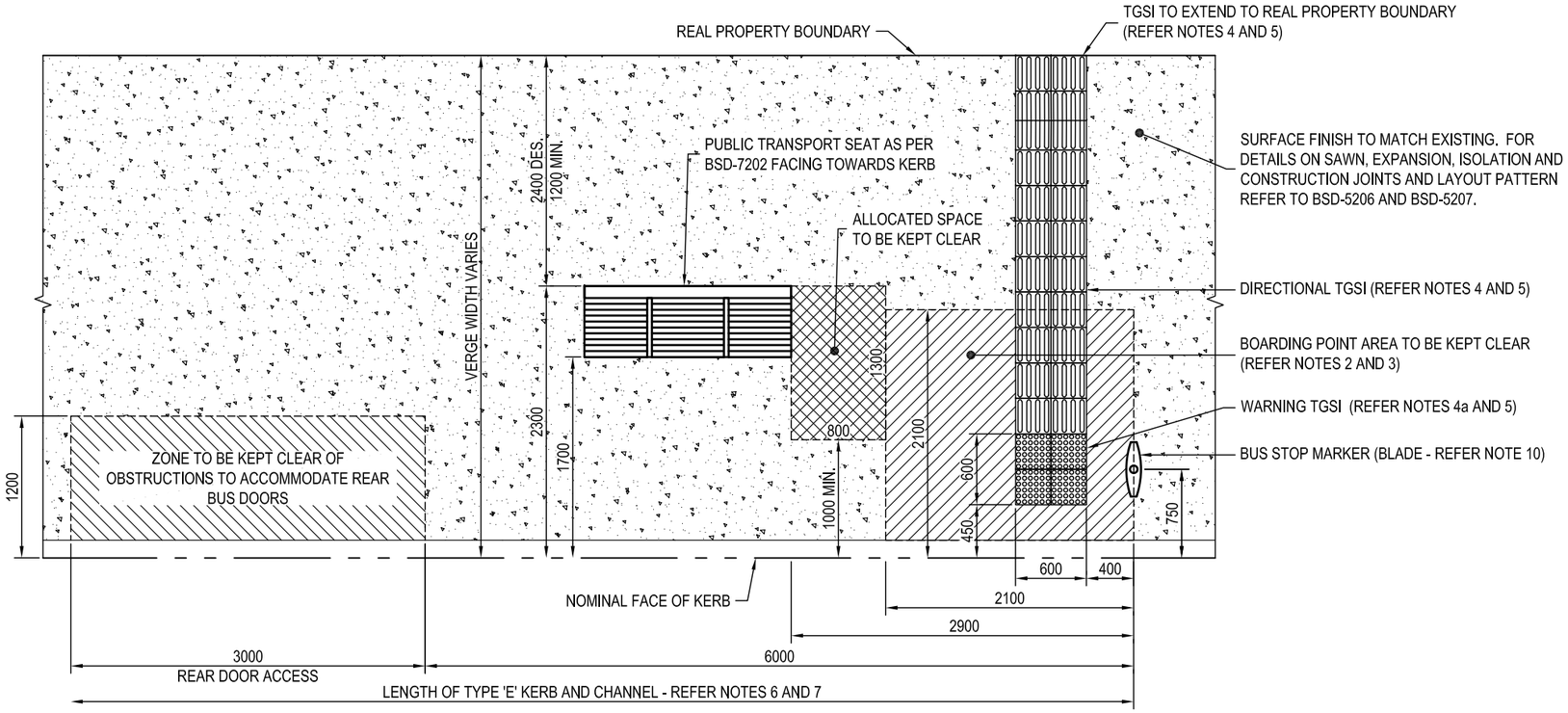

REGULAR BUS STOP WITH SEAT IN CENTRES - PREFERRED

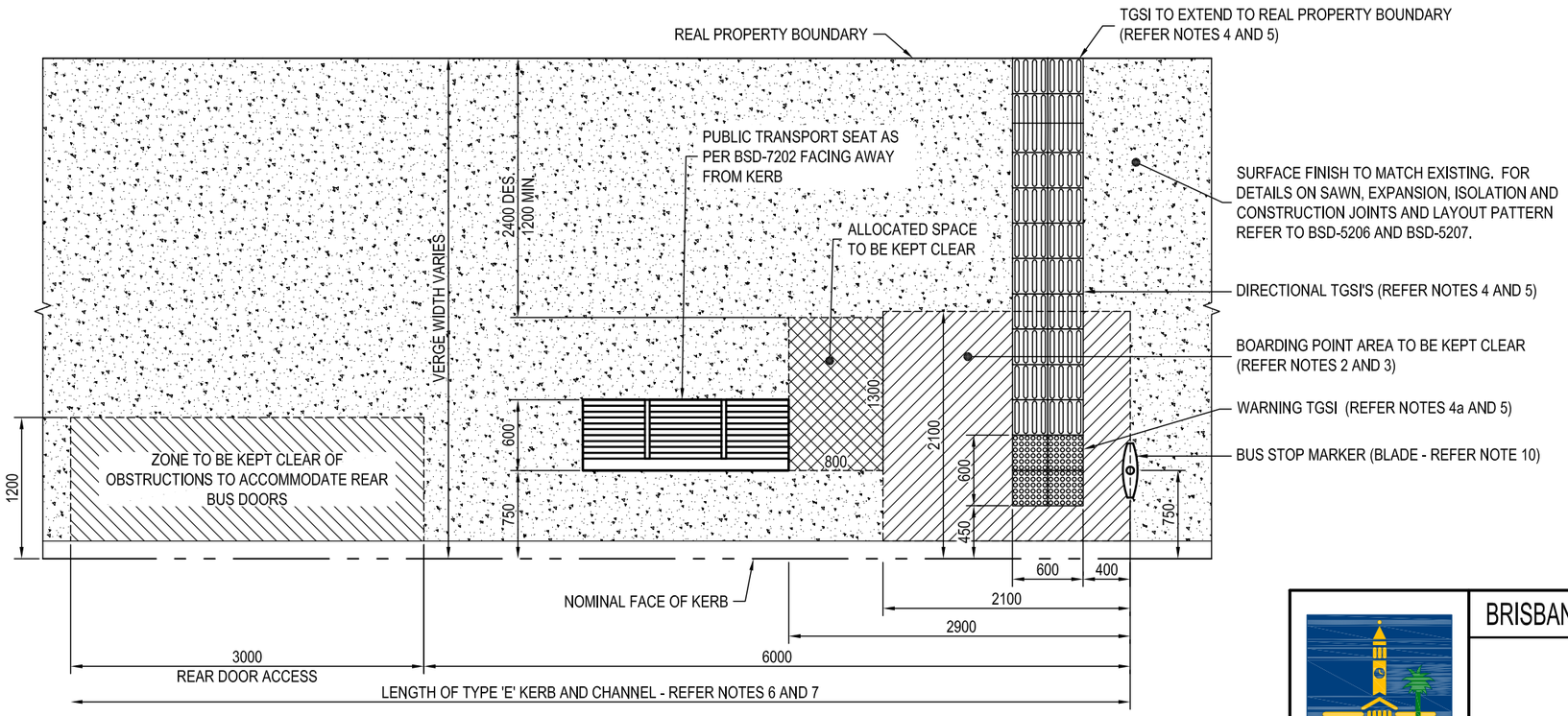

REGULAR BUS STOP WITH SEAT IN CENTRES - CONSTRAINED SITE

NOTES:

1. REFER BSD-2103 FOR CONCRETE HARDSTAND DETAILS (WHERE APPLICABLE). HARDSTAND FINISH TO MATCH SURROUNDING AREA FINISH.
2. BOARDING POINT AREA TO HAVE CROSSFALL OF 1 IN 40 MAX. WHERE BOARDING POINT HAS A CROSSFALL OF GREATER THAN 1 IN 40, REFER TO COUNCIL FOR ALTERNATIVE OPTIONS.
3. LONGITUDINAL GRADE TO MATCH EXISTING ROAD.
4. CUTTING OF TGSI:
   a. NO WARNING TGSI SHALL BE CUT;
   b. CUTTING OF DIRECTIONAL TGSI SHALL BE KEPT TO A MINIMUM;
   c. WHERE DIRECTIONAL TGSI ARE TO BE CUT, THEY SHALL BE CUT IN ADJACENT PAIRS;
   d. THE MINIMUM LENGTH OF EACH OF THE CUT TGSI'S PAIRS SHALL NOT BE LESS THAN 150mm, MEASURED IN THE DIRECTION OF THE PATH OF TRAVEL;
   e. THE PAIR OF DIRECTIONAL TGSI AT THE END OF THE PATH OF TRAVEL SHALL NOT BE CUT.
5. TGSI TYPE, COLOUR AND INSTALLATION AS PER BSD-5218.
6. STORM WATER SOLUTION TO BE ASSESSED ON A SITE-BY-SITE BASIS.
7. MODIFY EXISTING KERB ON APPROACH SIDE OF THE BUS STOP TO ENSURE SAFE ALIGHTING FROM BUSES:
   - FOR 12.5m AND 14.5m BUSES: 9m OF TYPE 'E' KERB;
   - FOR 18m BUSES: 14m TYPE 'E' KERB.
   - CONSTRUCT 1.0m TRANSITION AT EACH END.
8. TYPE 'E' KERB AS PER BSD-2001.
9. WASTE BIN TO BE APPROVED BY COUNCIL.
10. BLADE SIGN TO TRANSLINK BUS NETWORK INFRASTRUCTURE SIGNAGE MANUAL SIGN IS-10a.
11. CENTRES ARE LAND ZONED AS CENTRE BY BRISBANE CITY PLAN 2014 AND INFRASTRUCTURE DESIGN PLANNING SCHEME POLICY.
12. DIMENSIONS IN MILLIMETRES (U.N.O.).

BRISBANE CITY

BRISBANE CITY COUNCIL STANDARD DRAWING

REGULAR BUS STOP - IN CENTRES - SHEET 3 OF 3

PUBLISH DATE	NOV 2019
SCALE	NOT TO SCALE
DRAWING NUMBER	BSD-2105
ORIGINAL SIZE A3	REVISION C

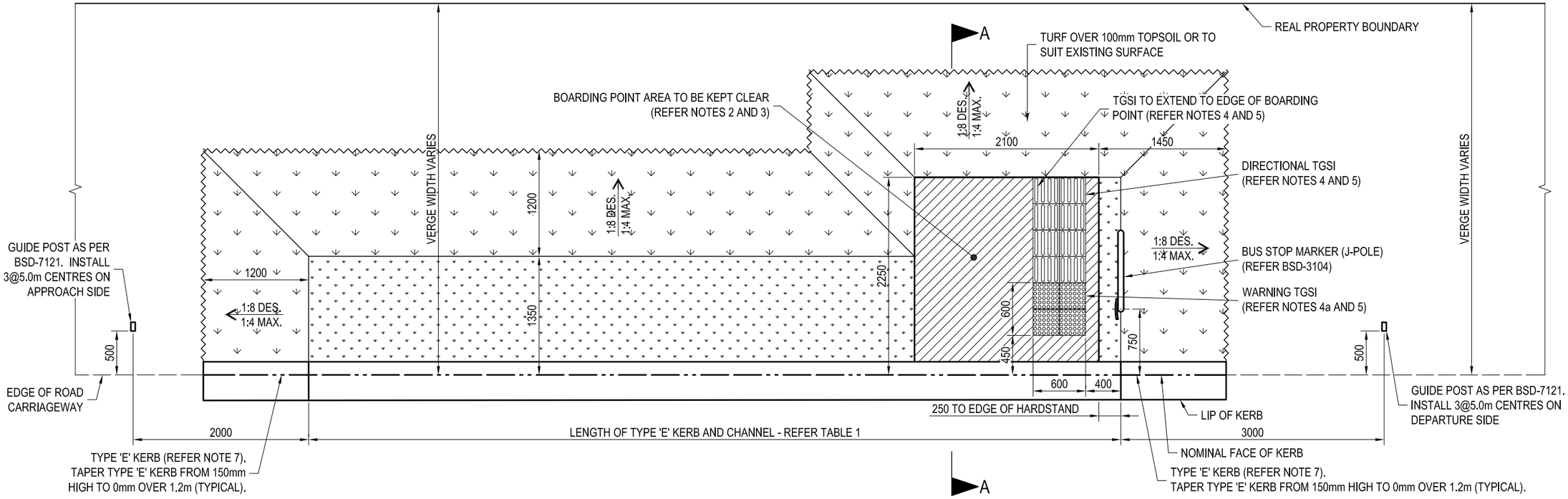

REGULAR BUS STOP ON CARRIAGEWAY WITHOUT KERB

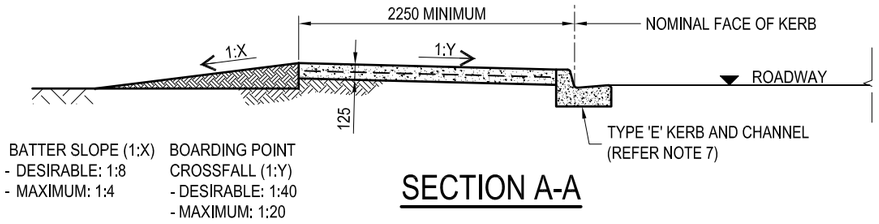

SECTION A-A

TABLE 1

KERB REQUIREMENT AT BUS STOP		
	12.5m AND 14.5m BUS	18.0m BUS (ARTICULATED BUS)
REGULAR BUS STOP ON CARRIAGEWAY WITH EXISTING KERB	MODIFY EXISTING KERB TO PROVIDE 9.0m OF TYPE 'E' KERB ON THE APPROACH SIDE OF THE BUS STOP (WITH 1.0m TRANSITION AT EACH END).	MODIFY EXISTING KERB TO PROVIDE 14.0m OF TYPE 'E' KERB ON THE APPROACH SIDE OF THE BUS STOP (WITH 1.0m TRANSITION AT EACH END).
REGULAR BUS STOP ON CARRIAGEWAY WITHOUT KERB	CONSTRUCT 9.0m OF TYPE 'E' KERB ON THE APPROACH SIDE OF THE BUS STOP. TAPER TYPE 'E' KERB FROM 150mm HIGH TO 0mm OVER 1.2m AT EACH END.	CONSTRUCT 14.0m OF TYPE 'E' KERB ON THE APPROACH SIDE OF THE BUS STOP. TAPER TYPE 'E' KERB FROM 150mm HIGH TO 0mm OVER 1.2m

NOTES:

1. HARDSTANDS TO MATCH SURROUNDING AREA FINISH.
2. BOARDING POINT AREA TO HAVE CROSSFALL OF 1 IN 40 MAX. WHERE BOARDING POINT HAS A CROSSFALL OF GREATER THAN 1 IN 40, REFER TO COUNCIL FOR ALTERNATIVE OPTIONS.
3. LONGITUDINAL GRADE TO MATCH EXISTING ROAD.
4. CUTTING OF TGSI:
   a. NO WARNING TGSI SHALL BE CUT;
   b. CUTTING OF DIRECTIONAL TGSI SHALL BE KEPT TO A MINIMUM;
   c. WHERE DIRECTIONAL TGSI ARE TO BE CUT, THEY SHALL BE CUT IN ADJACENT PAIRS;
   d. THE MINIMUM LENGTH OF EACH OF THE CUT TGSI'S PAIRS SHALL NOT BE LESS THAN 150mm, MEASURED IN THE DIRECTION OF THE PATH OF TRAVEL;
   e. THE PAIR OF DIRECTIONAL TGSI AT THE END OF THE PATH OF TRAVEL SHALL NOT BE CUT.
5. TGSI TYPE, COLOUR AND INSTALLATION AS PER BSD-5218.
6. STORM WATER SOLUTION TO BE ASSESSED ON A SITE-BY-SITE BASIS.
7. TYPE 'E' KERB AS PER BSD-2001.
8. DIMENSIONS IN MILLIMETRES (U.N.O.).

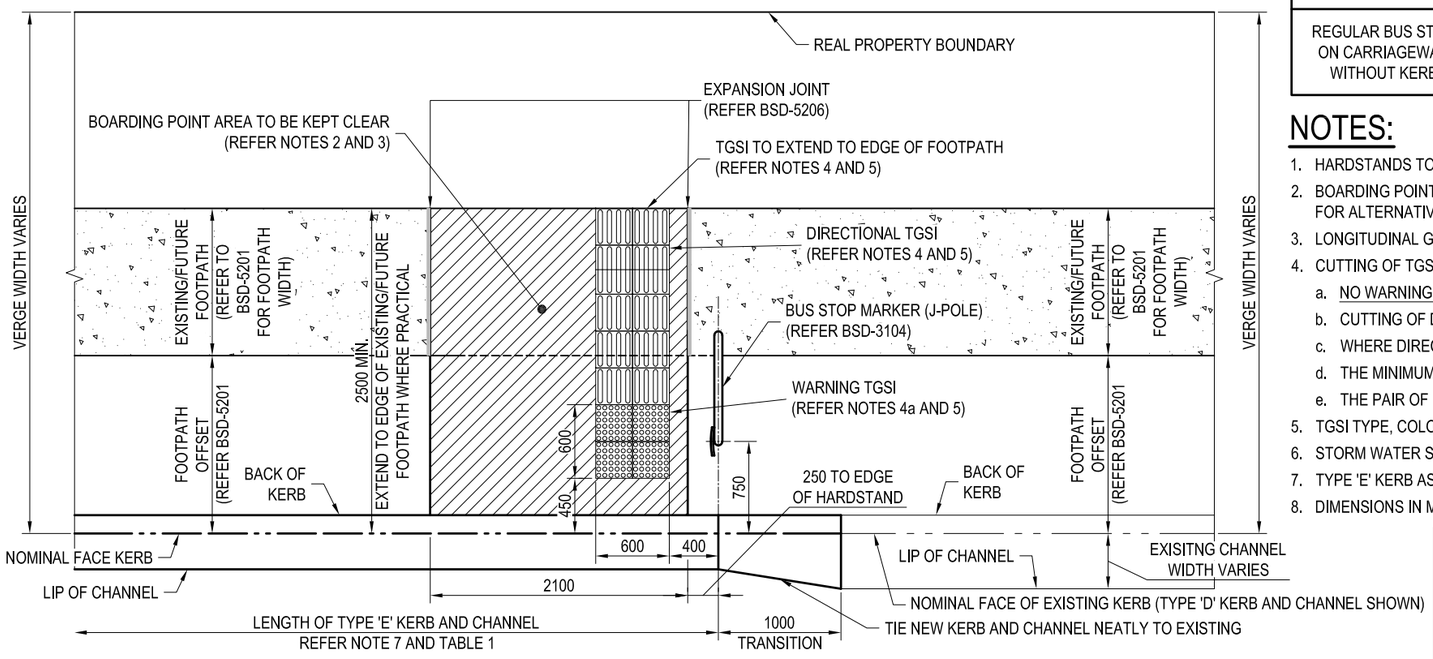

REGULAR BUS STOP ON CARRIAGEWAY WITH EXISTING KERB

BRISBANE CITY

BRISBANE CITY COUNCIL STANDARD DRAWING

REGULAR BUS STOP - WITHOUT SEAT - SHEET 1 OF 3

PUBLISH DATE	NOV 2019
SCALE	NOT TO SCALE
DRAWING NUMBER	BSD-2105
ORIGINAL SIZE	A3
REVISION	C

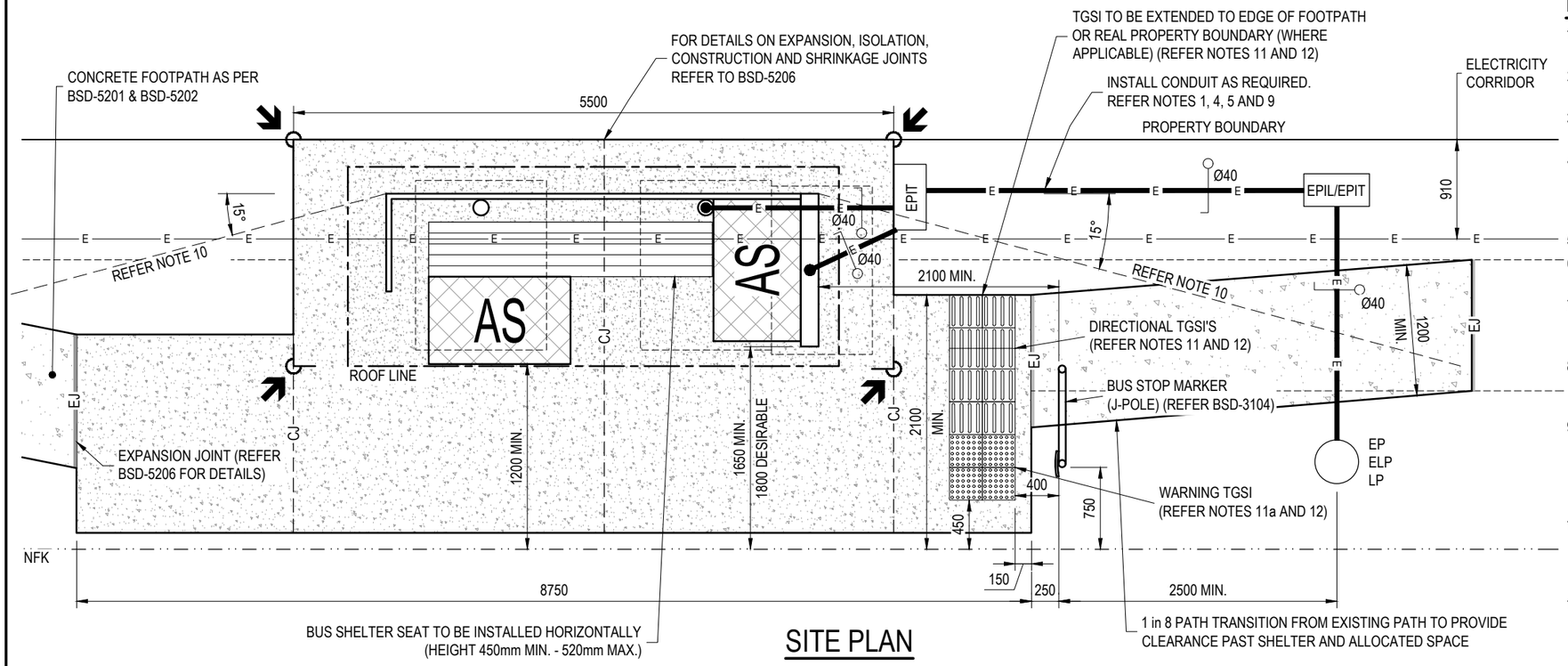

SITE PLAN

N.T.S.

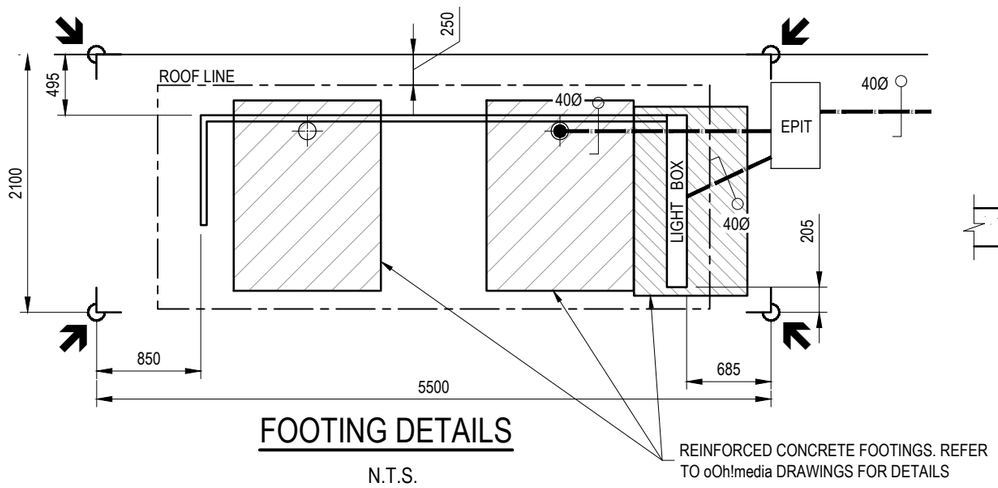

FOOTING DETAILS

N.T.S.

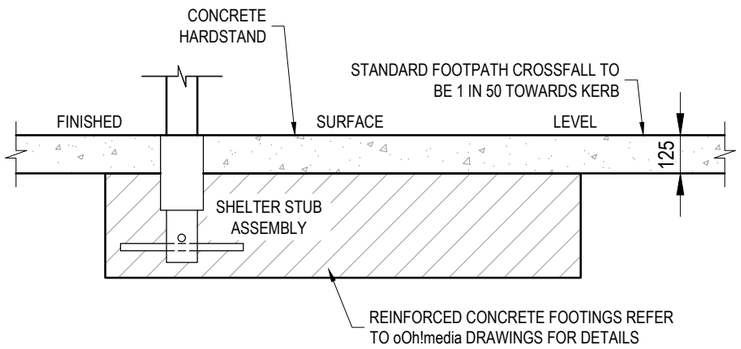

TYPICAL FOOTING SECTION

N.T.S.

NOTES:

1. TO BE READ IN CONJUNCTION WITH oOh!media DRAWINGS. oOh!media SHELTERS ARE INSTALLED AND MAINTAINED BY oOh!media UNDER CONTRACT WITH BRISBANE CITY COUNCIL.
2. BOARDING POINT AREA TO HAVE CROSSFALL OF 1 IN 40 MAX. WHERE BOARDING POINT HAS A CROSSFALL OF GREATER THAN 1 IN 40, REFER TO COUNCIL FOR ALTERNATIVE OPTIONS.
3. MINIMUM CLEAR ACCESS PATH OF 1.2M REQUIRED BETWEEN ALL INFRASTRUCTURE AND ALLOCATED WHEELCHAIR SPACES.
4. ELECTRICITY SUPPLY TO SHELTER AND/OR LIGHT BOX TYPICALLY TARIFF 91 - OTHER (UNMETERED) OR AS DIRECTED BY THE SHELTER OPERATOR (oOh!media). BILLING ARRANGEMENT FOR THE SHELTER ELECTRICITY SUPPLY TO BE AS ARRANGED BY SHELTER OPERATOR.
5. 600 MIN. COVER TO CONDUITS.
6. CONCRETE, HARDSTANDS TO BE 125mm THICK GRADE N32 CONCRETE BROOM FINISHED SURFACE (FOR SLIP RESISTANCE). SL72 MESH PLACED CENTRALLY.
7. ALTERNATIVE SURFACE FINISHES (i.e. EXPOSED AGGREGATE OR PAVERS) TO COMPLY WITH DISABILITY STANDARD FOR LUMINANCE CONTRAST AND/OR AESTHETICS FOR 'CITY SIGNATURE' REQUIREMENTS, AS REQUIRED.
8. THE ALIGNMENT AND DEPTHS OF EXISTING SERVICES SHALL BE PROVEN ON SITE PRIOR TO ANY EXCAVATION. CONTACT "DIAL BEFORE YOU DIG" ON TEL. NO. 1100 FOR THE LOCATION OF SERVICE AUTHORITY ASSETS.
9. POINT OF SUPPLY PRIORITY:
   1. EP/ELP(ELECTRICITY POWER/LIGHT POLE)
   2. EPIL (ELECTRICITY PILLAR)
   3. EPIT (ELECTRICITY No.4 PIT)
   4. LP (STREET LIGHT POLE)
10. WHERE PLANTINGS ARE PROVIDED, USE ONLY GROUND COVER OR LOW SHRUBS (<0.5m HIGH). TREES FOR SHADE SHOULD BE LONG-TRUNKED WITH MINIMUM BRANCH HEIGHT OF 4.5m. PLANTINGS SHOULD NOT OBSTRUCT LINE OF SIGHT BETWEEN APPROACHING VEHICLES AND LIGHT BOX DISPLAY. (COUNCIL TO APPROVE LAYOUT).
11. CUTTING OF TGSI:
    a. NO WARNING TGSI SHALL BE CUT;
    b. CUTTING OF DIRECTIONAL TGSI SHALL BE KEPT TO A MINIMUM;
    c. WHERE DIRECTIONAL TGSI ARE TO BE CUT, THEY SHALL BE CUT IN ADJACENT PAIRS;
    d. THE MINIMUM LENGTH OF EACH OF THE CUT TGSI'S PAIRS SHALL NOT BE LESS THAN 150mm, MEASURED IN THE DIRECTION OF THE PATH OF TRAVEL;
    e. THE PAIR OF DIRECTIONAL TGSI AT THE END OF THE PATH OF TRAVEL SHALL NOT BE CUT.
12. TGSI TYPE, COLOUR AND INSTALLATION AS PER BSD-5218.
13. STORMWATER SOLUTION/DESIGN TO BE ASSESSED ON A SITE-BY-SITE BASIS.
14. LONGITUDINAL GRADE TO MATCH ROAD.
15. WASTE BIN TO BE APPROVED BY COUNCIL.
16. ALL DIMENSIONS ARE IN MILLIMETERS (U.N.O.).

LIGHTING NOTES:

L1. ILLUMINATION WITHIN THE BUS SHELTER TO COMPLY WITH *AS/NZS1158.3.1* - LIGHTING FOR ROADS AND PUBLIC SPACES - PART 3.1: PEDESTRIAN AREA (CATEGORY P) LIGHTING - PERFORMANCE AND DESIGN REQUIREMENTS SUB CATEGORY PA1.

L2. LUMINAIRE/LIGHT IS TO BE POSITIONED AT THE FRONT OF THE SHELTER FROM THE ROOF, LIGHTING IS TO NOT ADVERSELY IMPACT ON THE ADJACENT TRAFFIC.

L3. LUMINAIRE IS TO BE PRE-WIRED INTO THE SHELTER .

L4. SWITCHBOARD FOR THE SHELTER IS TO BE LOCATED IN THE REAR POST. PE CELL IS TO BE LOCATED ON THE SAME POST IN A POSITION THAT WILL NOT BE IMPACTED BY LIGHTING IN THE PROXIMITY.

L5. LIGHT SOURCE IS TO BE LED WITH A CORRELATED COLOUR TEMPERATURE OF 4000K AND A COLOUR RENDERING INDEX (CRI) Ra ≥80.

L6. LED LUMINAIRES OR LAMPS USED FOR BRISBANE CITY COUNCIL SHALL COMPLY WITH THE FOLLOWING MINIMUM ENERGY PERFORMANCE STANDARDS (MEPS) EFFICACY REQUIREMENTS AS SHOWN IN TABLE 1. THE EFFICACY CALCULATION SHALL BE BASED ON INITIAL LUMINOUS FLUX MEASUREMENTS ACCORDING TO CIE S 025/E (OR IES LM-79).

L7. THE LUMINAIRE DISTRIBUTOR SHOULD ALSO SUPPLY PHOTOMETRIC DATA (IN IES AND/OR CIE FORMAT) FROM A NATA ACCREDITED LABORATORY OR A LABORATORY, WHOSE ACCREDITATION IS RECOGNISED BY NATA UNDER THE MUTUAL RECOGNITION SCHEME.

L8. THERE IS NO REQUIREMENT FOR ADDITIONAL PUBLIC SAFETY LIGHT (STREET LIGHT) NEAR A BUS SHELTER, OVER AND ABOVE LIGHTING REQUIRED TO COMPLY WITH *AS/NZS1158*.

LEGEND

- SETOUT POINTS (INCLUDING FINISHED SURFACE LEVELS) TO BE MARKED ON SITE FOR oOh!media TO CONSTRUCT FOOTINGS
- Ø40 — Ø40 uPVC ORANGE (HD) CONDUIT WITH CABLE PROTECTION COVER STRIP
- NFK — NOMINAL FACE OF KERB
- AS — ALLOCATED WHEELCHAIR SPACE (1300x800)
- WARNING TACTILE GROUND SURFACE INDICATORS AS PER *AS/NZS1428.4.1* (REFER NOTES 11a AND 12)
- DIRECTIONAL TACTILE GROUND SURFACE INDICATORS AS PER *AS/NZS1428.4.1* (REFER NOTES 11 AND 12)

TABLE 1: LED LUMINAIRES EFFICACY REQUIREMENTS

	LED LAMPS		LED LUMINAIRES (SMALL)	LED PLANAR, BATTENS & TROFFERS
	DIRECTIONAL & NON-DIRECTIONAL LAMPS	LINEAR LED (TUBE)	LUMINOUS FLUX ≥100 lm & <2,500 lm	LUMINOUS FLUX: ≥2,500 lm & <5,000 lm
EFFICACY	≥85 lm/W	≥110 lm/W	≥85 lm/W	≥110 lm/W

BRISBANE CITY

BRISBANE CITY COUNCIL STANDARD DRAWING

oOh!media MINI BOULEVARD BUS SHELTER

PUBLISH DATE	MAR 2021
SCALE	NOT TO SCALE
DRAWING NUMBER	BSD-2107
ORIGINAL SIZE	A3
REVISION	E

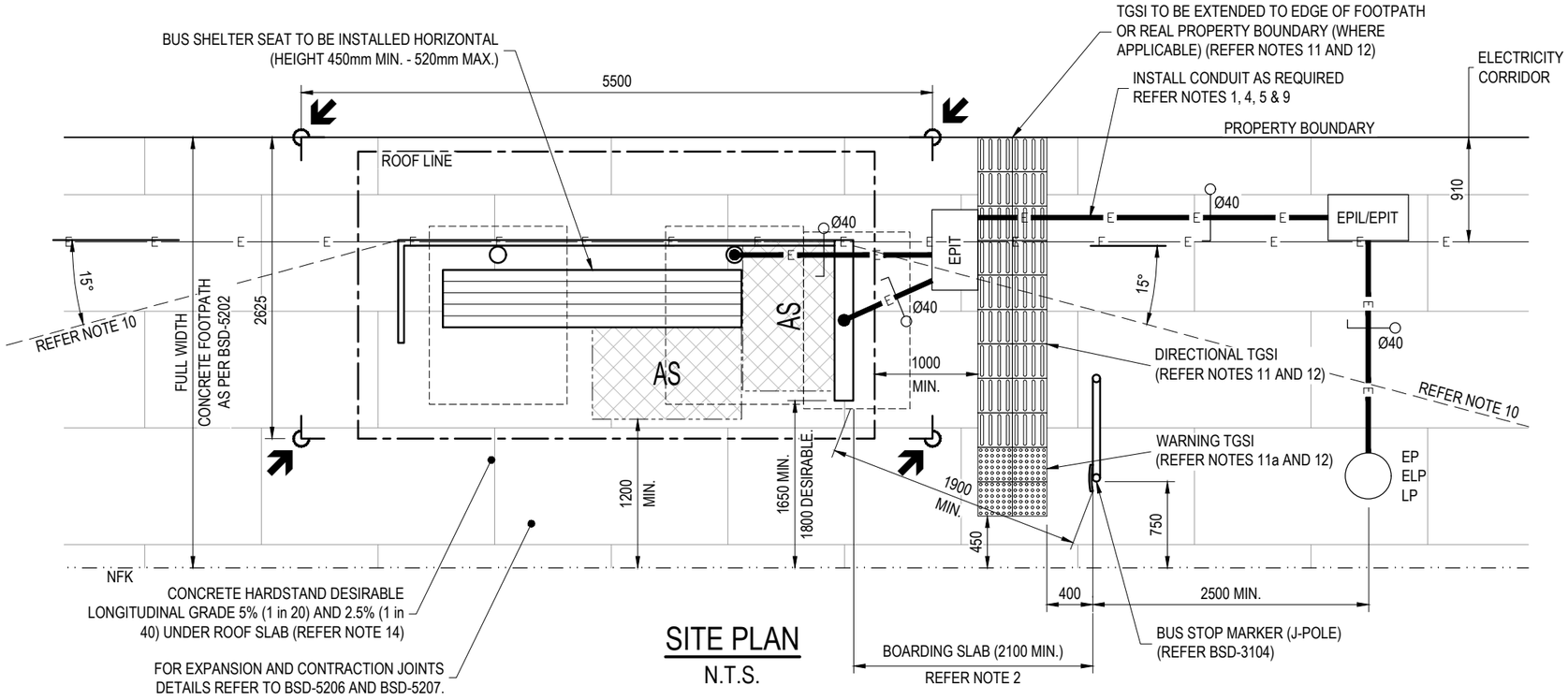

SITE PLAN

N.T.S.

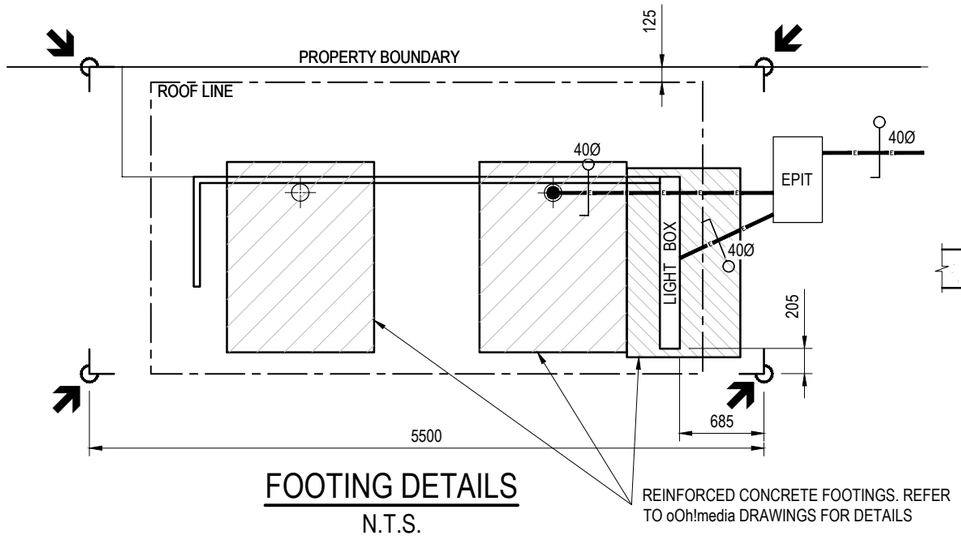

FOOTING DETAILS

N.T.S.

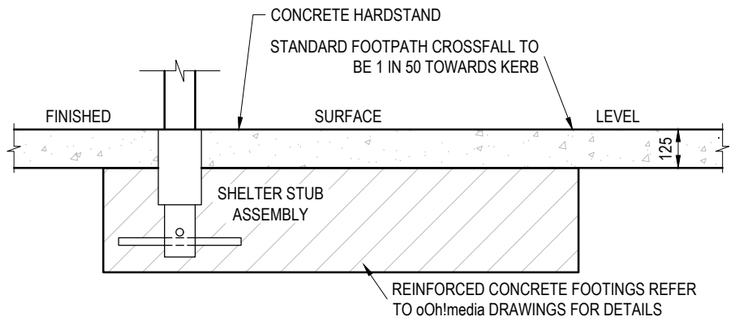

TYPICAL FOOTING SECTION

N.T.S.

LEGEND

- SETOUT POINTS (INCLUDING FINISHED SURFACE LEVELS) TO BE MARKED ON SITE FOR oOh!media TO CONSTRUCT FOOTINGS
- Ø40 — Ø40 uPVC ORANGE (HD) CONDUIT WITH CABLE PROTECTION COVER STRIP
- NFK — NOMINAL FACE OF KERB
- AS — ALLOCATED SPACE FOR PERSONS WITH A DISABILITY (PWD) (1300x800)
- WARNING TACTILE GROUND SURFACE INDICATORS AS PER *AS/NZS1428.4.1* (REFER NOTES 11a AND 12)
- DIRECTIONAL TACTILE GROUND SURFACE INDICATORS AS PER *AS/NZS1428.4.1* (REFER NOTES 11 AND 12)

TABLE 1: LED LUMINAIRES EFFICACY REQUIREMENTS

	LED LAMPS		LED LUMINAIRES (SMALL)	LED PLANAR, BATTENS & TROFFERS
	DIRECTIONAL & NON-DIRECTIONAL LAMPS	LINEAR LED (TUBE)	LUMINOUS FLUX ≥100 lm & <2,500 lm	LUMINOUS FLUX: ≥2,500 lm & <5,000 lm
EFFICACY	≥65 lm/W	≥100 lm/W	≥65 lm/W	≥90 lm/W

NOTES:

1. TO BE READ IN CONJUNCTION WITH oOh!media DRAWINGS. oOh!media SHELTERS ARE INSTALLED AND MAINTAINED BY oOh!media UNDER CONTRACT WITH BRISBANE CITY COUNCIL.
2. WHERE BUS STOP BOARDING SLAB HAS A CROSSFALL GREATER THAN 1 in 40 (IN BOTH DIRECTIONS) OR VERGE IS LESS THAN MINIMUM WIDTH SHOWN, REFER TO COUNCIL FOR ALTERNATIVE OPTIONS.
3. MINIMUM CLEAR ACCESS PATH OF 1.2m REQUIRED BETWEEN ALL INFRASTRUCTURE AND ALLOCATED SPACES FOR PERSONS WITH A DISABILITY (PWD).
4. ELECTRICITY SUPPLY TO SHELTER AND/OR LIGHT BOX TYPICALLY TARIFF 91 - OTHER (UNMETERED) OR AS DIRECTED BY THE SHELTER OPERATOR (oOh!media). BILLING ARRANGEMENT FOR THE SHELTER ELECTRICITY SUPPLY TO BE AS ARRANGED BY SHELTER OPERATOR.
5. 600 MIN. COVER TO CONDUITS.
6. CONCRETE, HARDSTANDS TO BE 125mm THICK GRADE N32 CONCRETE BROOM FINISHED SURFACE (FOR SLIP RESISTANCE). SL72 MESH PLACED CENTRALLY.
7. ALTERNATIVE SURFACE FINISHES (i.e. EXPOSED AGGREGATE OR PAVERS) TO COMPLY WITH DISABILITY STANDARD FOR LUMINANCE CONTRAST AND/OR AESTHETICS FOR 'CITY SIGNATURE' REQUIREMENTS, AS REQUIRED.
8. THE ALIGNMENT AND DEPTHS OF EXISTING SERVICES SHALL BE PROVEN ON SITE PRIOR TO ANY EXCAVATION. CONTACT "DIAL BEFORE YOU DIG" ON TEL. NO. 1100 FOR THE LOCATION OF SERVICE AUTHORITY ASSETS.
9. POINT OF SUPPLY PRIORITY:
   1. EP/ELP(ELECTRICITY POWER/LIGHT POLE)
   2. EPIL (ELECTRICITY PILLAR)
   3. EPIT (ELECTRICITY No.4 PIT)
   4. LP (STREET LIGHT POLE)
10. WHERE PLANTINGS ARE PROVIDED, USE ONLY GROUND COVER OR LOW SHRUBS (<0.5m HIGH). TREES FOR SHADE SHOULD BE LONG-TRUNKED WITH MINIMUM BRANCH HEIGHT OF 4.5m. PLANTINGS SHOULD NOT OBSTRUCT LINE OF SIGHT BETWEEN APPROACHING VEHICLES AND LIGHT BOX DISPLAY. (COUNCIL TO APPROVE LAYOUT).
11. CUTTING OF TGSI:
    a. NO WARNING TGSI SHALL BE CUT;
    b. CUTTING OF DIRECTIONAL TGSI SHALL BE KEPT TO A MINIMUM;
    c. WHERE DIRECTIONAL TGSI ARE TO BE CUT, THEY SHALL BE CUT IN ADJACENT PAIRS;
    d. THE MINIMUM LENGTH OF EACH OF THE CUT TGSI'S PAIRS SHALL NOT BE LESS THAN 150mm, MEASURED IN THE DIRECTION OF THE PATH OF TRAVEL;
    e. THE PAIR OF DIRECTIONAL TGSI AT THE END OF THE PATH OF TRAVEL SHALL NOT BE CUT.
12. TGSI TYPE, COLOUR AND INSTALLATION AS PER BSD-5218.
13. STORMWATER SOLUTION/DESIGN TO BE ASSESSED ON A SITE-BY-SITE BASIS.
14. LONGITUDINAL GRADE TO MATCH ROAD.
15. WASTE BIN TO BE APPROVED BY COUNCIL.
16. ALL DIMENSIONS ARE IN MILLIMETERS (U.N.O.).

LIGHTING NOTES:

L1. ILLUMINATION WITHIN THE BUS SHELTER TO COMPLY WITH *AS/NZS1158.3.1* - LIGHTING FOR ROADS AND PUBLIC SPACES - PART 3.1: PEDESTRIAN AREA (CATEGORY P) LIGHTING - PERFORMANCE AND DESIGN REQUIREMENTS SUB CATEGORY PA1.

L2. LUMINAIRE/LIGHT IS TO BE POSITIONED AT THE FRONT OF THE SHELTER FROM THE ROOF, LIGHTING IS TO NOT ADVERSELY IMPACT ON THE ADJACENT TRAFFIC.

L3. LUMINAIRE IS TO BE PRE-WIRED INTO THE SHELTER .

L4. SWITCHBOARD FOR THE SHELTER IS TO BE LOCATED IN THE REAR POST. PE CELL IS TO BE LOCATED ON THE SAME POST IN A POSITION THAT WILL NOT BE IMPACTED BY LIGHTING IN THE PROXIMITY.

L5. LIGHT SOURCE IS TO BE LED WITH A CORRELATED COLOUR TEMPERATURE OF 4000K AND A COLOUR RENDERING INDEX (CRI) Ra ≥80.

L6. LED LUMINAIRES OR LAMPS USED FOR BRISBANE CITY COUNCIL SHALL COMPLY WITH THE FOLLOWING MINIMUM ENERGY PERFORMANCE STANDARDS (MEPS) EFFICACY REQUIREMENTS AS SHOWN IN TABLE 1. THE EFFICACY CALCULATION SHALL BE BASED ON INITIAL LUMINOUS FLUX MEASUREMENTS ACCORDING TO CIE S 025/E (OR IES LM-79).

L7. THE LUMINAIRE DISTRIBUTOR SHOULD ALSO SUPPLY PHOTOMETRIC DATA (IN IES AND/OR CIE FORMAT) FROM A NATA ACCREDITED LABORATORY OR A LABORATORY, WHOSE ACCREDITATION IS RECOGNISED BY NATA UNDER THE MUTUAL RECOGNITION SCHEME.

L8. THERE IS NO REQUIREMENT FOR ADDITIONAL PUBLIC SAFETY LIGHT (STREET LIGHT) NEAR A BUS SHELTER, OVER AND ABOVE LIGHTING REQUIRED TO COMPLY WITH *AS/NZS1158*.

BRISBANE CITY

BRISBANE CITY COUNCIL STANDARD DRAWING

oOh!media BOULEVARD
BUS SHELTER

PUBLISH DATE	MAR 2021
SCALE	NOT TO SCALE
DRAWING NUMBER	BSD-2108
ORIGINAL SIZE	A3
REVISION	E

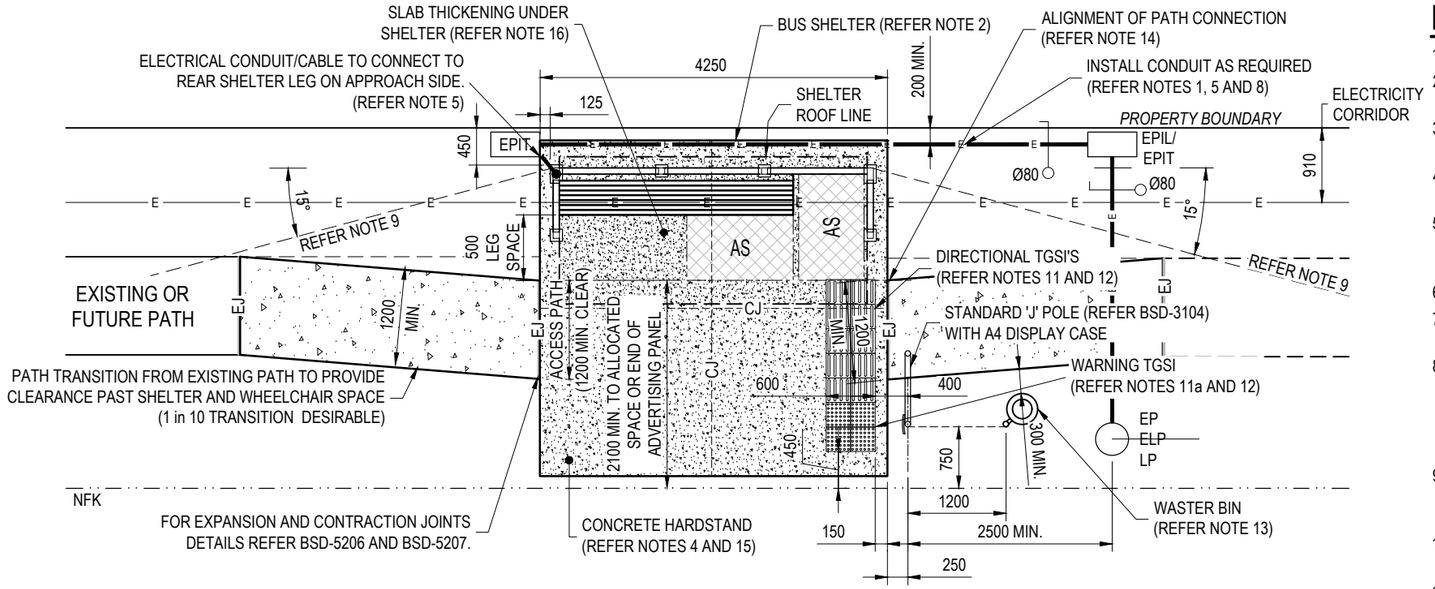

PLAN STANDARD TRANSLINK SUBURBAN SHELTER - FOOTPATH THROUGH STOP

N.T.S.

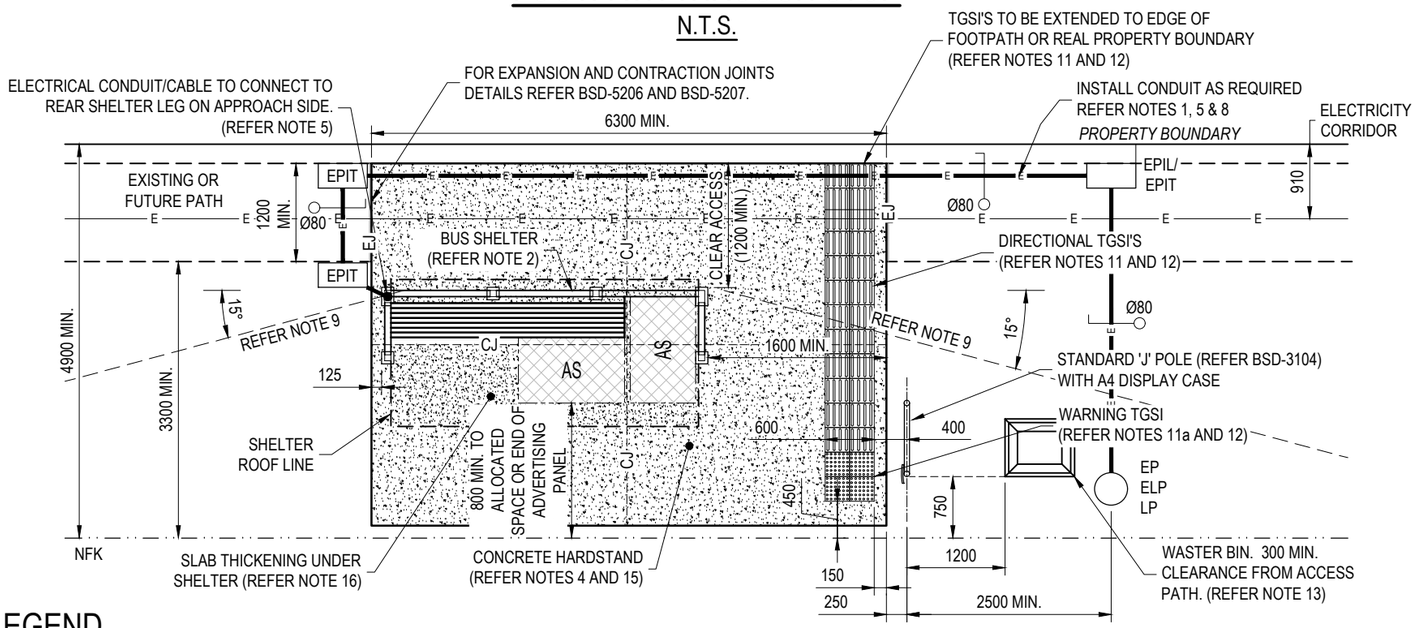

PLAN STANDARD TRANSLINK SUBURBAN SHELTER - FOOTPATH BEHIND STOP

N.T.S.

NOTES

1. TO BE READ IN CONJUNCTION WITH TRANSLINK DRAWINGS.
2. SHELTERS TO BE CONSTRUCTED AND INSTALLED TO TRANSLINK DRAWINGS 5-0402 (SUBURBAN SHELTER WITHOUT ADVERTISING PANEL OR 5-0401 (SUBURBAN SHELTER WITH ADVERTISING PANEL).
3. MINIMUM CLEAR ACCESS OF 1.2m REQUIRED BETWEEN ALL INFRASTRUCTURE PAST ALLOCATED SPACES FOR PERSONS WITH A DISABILITY.
4. WHERE BUS STOP BOARDING SLAB HAS A CROSSFALL GREATER THAN 1 in 40 (IN BOTH DIRECTIONS) OR VERGE IS LESS THAN MINIMUM WIDTH SHOWN, REFER TO BRISBANE CITY COUNCIL PUBLIC TRANSPORT FACILITIES FOR DDA COMPLIANCE ADVICE.
5. 600 MIN. COVER TO CONDUITS. ALL CONDUITS TO Ø80mm (U.N.O.). EACH CONDUIT TO BE FITTED WITH 6mm BRAID POLYPROPYLENE ROPE TO PULL IN HAUL ROPE WITH BREAKING STRAIN OF 1.0kN. AT THE EPIT ON THE APPROACH SIDE OF THE SHELTER A Ø25mm CORRUGATED CONDUIT IS TO BE PROVIDED COMPLETE WITH 6mm BRAID POLYPROPYLENE ROPE.
6. CONCRETE HARDSTANDS TO BE CONSTRUCTED TO BSD-2104.
7. THE ALIGNMENT AND DEPTHS OF EXISTING SERVICES SHALL BE PROVEN ON SITE PRIOR TO ANY EXCAVATION. CONTACT "DIAL BEFORE YOU DIG" ON TEL. NO. 1100 FOR THE LOCATION OF SERVICE AUTHORITY ASSETS.
8. POINT OF SUPPLY PRIORITY:
   1. EP/ELP (ELECTRICITY POWER/LIGHT POLE)
   2. EPIL (ELECTRICITY PILLAR)
   3. EPIT (ELECTRICITY No.4 PIT)
   4. LP (STREET LIGHT POLE)
9. WHERE PLANTINGS ARE PROVIDED, USE ONLY GROUND COVER OR LOW SHRUBS (<0.5m HIGH). TREES FOR SHADE SHOULD BE LONG-TRUNKED WITH MINIMUM BRANCH HEIGHT OF 4.5m. PLANTINGS SHOULD NOT OBSTRUCT LINE OF SIGHT BETWEEN APPROACHING VEHICLES AND LIGHT BOX DISPLAY. (PUBLIC TRANSPORT TO APPROVE LAYOUT).
10. REFER TO BSD-5202 AND BSD-5206 FOR EXPANSION JOINT (EJ) AND CONTRACTION JOINT (CJ) CONSTRUCTION DETAILS. LOCATION ON DRAWING IS INDICATIVE ONLY AND TO BE CONFIRMED BY THE SUPERINTENDENT ON SITE.
11. CUTTING OF TGSI:
    a. NO WARNING TGSI SHALL BE CUT;
    b. CUTTING OF DIRECTIONAL TGSI SHALL BE KEPT TO A MINIMUM;
    c. WHERE DIRECTIONAL TGSI ARE TO BE CUT, THEY SHALL BE CUT IN ADJACENT PAIRS;
    d. THE MINIMUM LENGTH OF EACH OF THE CUT TGSI'S PAIRS SHALL NOT BE LESS THAN 150mm, MEASURED IN THE DIRECTION OF THE PATH OF TRAVEL;
    e. THE PAIR OF DIRECTIONAL TGSI AT THE END OF THE PATH OF TRAVEL SHALL NOT BE CUT.
12. TGSI TYPE, COLOUR AND INSTALLATION AS PER BSD-5218.
13. WASTE BIN TO BE APPROVED BY COUNCIL.
14. PATH CONNECTION TO ALIGN WITH ALLOCATED SPACE ON SUBURBAN SHELTERS WITHOUT ADVERTISING PANEL OR WITH THE END OF ADVERTISING PANEL ON SUBURBAN SHELTERS WITH ADVERTISING PANEL.
15. CONCRETE, HARDSTANDS TO BE 125mm THICK SURFACE BROOM FINISHED (FOR SLIP RESISTANCE) GRADE N32 CONCRETE. SL72 MESH PLACED CENTRALLY.
16. THE CONCRETE SLAB UNDER THE SHELTER SHALL BE THICKENED FROM 125mm TO 150mm FOR UPLIFT AND FIXING. MINIMUM ARE TO BE 4250 (ALONG THE REAR PANEL OF THE SHELTER) x 2000m. THE SHELTER SHALL BE CENTRALLY LOCATED ALONG THE LONG EDGE OF THE SLAB WITH THE REAR PANEL AT 250mm FROM THE EDGE OF THE SLAB (U.N.O.). FIXINGS SHALL BE N12 CHEMSET 801 HDG ANCHORS .
17. BOARDING POINT AREA TO HAVE CROSSFALL OF 1 IN 40 MAX. WHERE BOARDING POINT HAS A CROSSFALL OF GREATER THAN 1 IN 40, REFER TO COUNCIL FOR ALTERNATIVE OPTIONS.
18. LONGITUDINAL GRADE TO MATCH EXISTING ROAD.
19. ALL DIMENSIONS ARE IN MILLIMETERS (U.N.O.).

LIGHTING NOTES:

L1. ILLUMINATION WITHIN THE BUS SHELTER TO COMPLY WITH *AS/NZS1158.3.1* - LIGHTING FOR ROADS AND PUBLIC SPACES - PART 3.1: PEDESTRIAN AREA (CATEGORY P) LIGHTING - PERFORMANCE AND DESIGN REQUIREMENTS SUB CATEGORY PA1.

L2. LUMINAIRE/LIGHT IS TO BE POSITIONED AT THE FRONT OF THE SHELTER FROM THE ROOF, LIGHTING IS TO NOT ADVERSELY IMPACT ON THE ADJACENT TRAFFIC.

L3. LUMINAIRE IS TO BE PRE-WIRED INTO THE SHELTER .

L4. SWITCHBOARD FOR THE SHELTER IS TO BE LOCATED IN THE REAR POST. PE CELL IS TO BE LOCATED ON THE SAME POST IN A POSITION THAT WILL NOT BE IMPACTED BY LIGHTING IN THE PROXIMITY.

L5. LIGHT SOURCE IS TO BE LED WITH A CORRELATED COLOUR TEMPERATURE OF 4000K AND A COLOUR RENDERING INDEX (CRI) Ra ≥80.

L6. LED LUMINAIRES OR LAMPS USED FOR BRISBANE CITY COUNCIL SHALL COMPLY WITH THE FOLLOWING MINIMUM ENERGY PERFORMANCE STANDARDS (MEPS) EFFICACY REQUIREMENTS AS SHOWN IN TABLE 1. THE EFFICACY CALCULATION SHALL BE BASED ON INITIAL LUMINOUS FLUX MEASUREMENTS ACCORDING TO CIE S 025/E (OR IES LM-79).

L7. THE LUMINAIRE DISTRIBUTOR SHOULD ALSO SUPPLY PHOTOMETRIC DATA (IN IES AND/OR CIE FORMAT) FROM A NATA ACCREDITED LABORATORY OR A LABORATORY, WHOSE ACCREDITATION IS RECOGNISED BY NATA UNDER THE MUTUAL RECOGNITION SCHEME.

L8. THERE IS NO REQUIREMENT FOR ADDITIONAL PUBLIC SAFETY LIGHT (STREET LIGHT) NEAR A BUS SHELTER, OVER AND ABOVE LIGHTING REQUIRED TO COMPLY WITH *AS/NZS1158*.

LEGEND

- Ø80 — Ø80 uPVC ORANGE (HD) CONDUIT WITH CABLE PROTECTION COVER STRIP
- WARNING TACTILE GROUND SURFACE INDICATORS AS PER *AS/NZS1428.4.1* (REFER NOTES 11a AND 12)
- DIRECTIONAL TACTILE GROUND SURFACE INDICATORS AS PER *AS/NZS1428.4.1* (REFER NOTES 11 AND 12)
- AS — ALLOCATED SPACE FOR PERSONS WITH A DISABILITY (PWD) (1300x800)
- NFK — NOMINAL FACE OF KERB

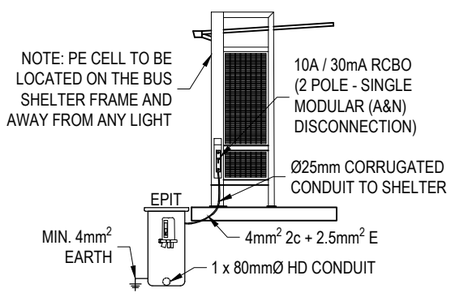

PIT TO SHELTER ELECTRICAL CONNECTION

N.T.S.

TABLE 1: LED LUMINAIRES EFFICACY REQUIREMENTS

	LED LAMPS		LED LUMINAIRES (SMALL)	LED PLANAR, BATTENS & TROFFERS
	DIRECTIONAL & NON-DIRECTIONAL LAMPS	LINEAR LED (TUBE)	LUMINOUS FLUX ≥100 lm & <2,500 lm	LUMINOUS FLUX: ≥2,500 lm & <5,000 lm
EFFICACY	≥65 lm/W	≥100 lm/W	≥65 lm/W	≥90 lm/W

BRISBANE CITY

BRISBANE CITY COUNCIL STANDARD DRAWING

STANDARD TRANSLINK SUBURBAN SHELTER WITHOUT ADVERTISING PANEL TYPICAL LAYOUT

PUBLISH DATE	MAR 2021
SCALE	NOT TO SCALE
DRAWING NUMBER	BSD-2109
ORIGINAL SIZE	A3
REVISION	E

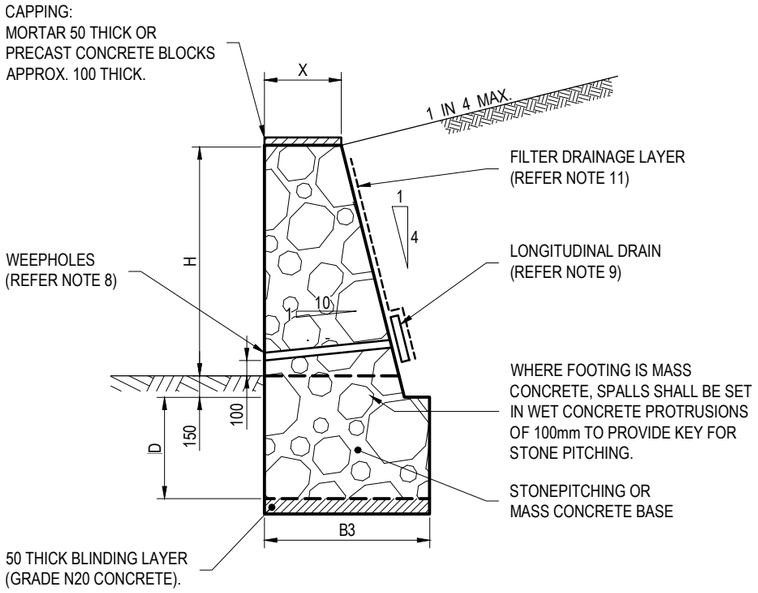

STONEPITCHED RETAINING WALL VERTICAL FACE

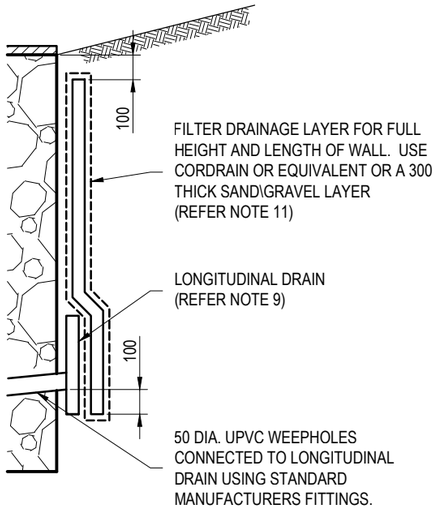

DRAINAGE DETAIL

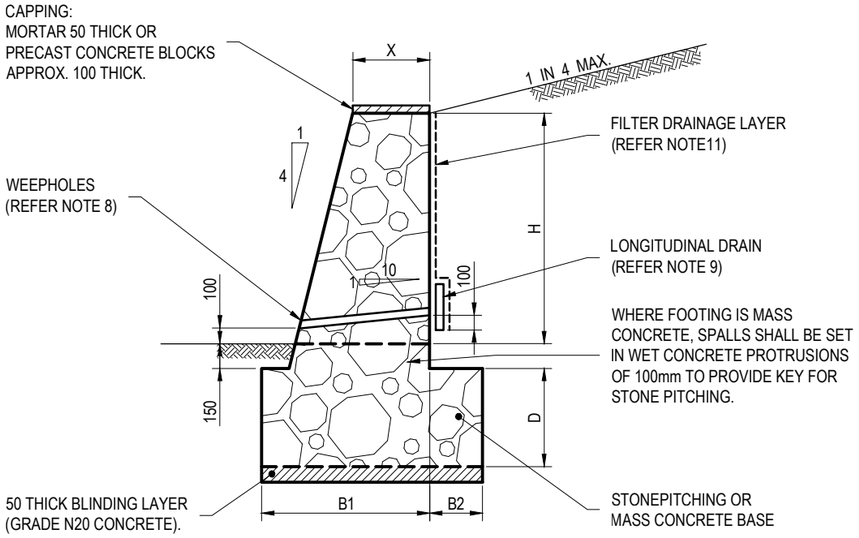

NOTE:
IF A FLATTER SLOPE TO BE ADOPTED FOR THE FRONT WALL FACE, INCREASE B1 TO SUIT. 4 IN 1 FACE SLOPE SHALL BE THE MINIMUM.

STONEPITCHED RETAINING WALL 4 IN 1 FACE SLOPE

WALL DIMENSIONS

FOR BACKFILL SLOPES UP TO 1 IN 4 WITH 5 kPa SURCHARGE

H	X	D	B1	B2	B3
0 - 400	400	400	700	0	700
401 - 750	400	400	800	250	850
751 - 1000	400	500	850	400	1100
1001 - 1250	450	500	1000	550	1250
1251 - 1500	500	500	1100	650	1500

NOTES:

1. PROJECT ENGINEER (RPEQ) TO VERIFY LOCATIONS OF ALL SERVICES PRIOR TO COMMENCING OF WORK AND AVOID OVERSTRESSING SERVICES FROM RETAINING WALL.
2. ALL WORKMANSHIP AND MATERIAL SHALL COMPLY WITH THE APPROPRIATE AUSTRALIAN STANDARDS THE ARE CURRENT AT THE TIME OF CONSTRUCTION.
3. THE WALLS HAVE BEEN DESIGNED IN ACCORDANCE WITH AS4678 - 2002 FOR A DESIGN LIFE OF 50 YEARS AND ON THE ASSUMPTION THAT A MINIMUM ALLOWABLE BEARING CAPACITY OF 100 kPa, A MINIMUM EFFECTIVE FRICTION ANGLE OF 32° AND BULK DENSITY OF 19 kN/m^3 ARE AVAILABLE ON SITE FOR FOUNDING MATERIAL. THE DESIGN IS NOT FOR VEHICLE LOADINGS HENCE A VEHICLE LOAD ON THE UPHILL LEVEL SHALL BE NO CLOSER THAN "H" FROM THE REAR CAPPING EDGE.
4. A GEOTECHNICAL ENGINEER (RPEQ) TO CERTIFY THAT THE ASSUMED GEOTECHNICAL PARAMETERS IN NOTE 3 CAN BE ACHIEVED ON SITE. IF THEY CANNOT BE ACHIEVED, A STRUCTURAL ENGINEER (RPEQ) TO BE CONSULTED TO REDESIGN THE FOOTINGS.
5. THE CONTRACTOR'S GEOTECHNICAL ENGINEER (RPEQ) SHALL CERTIFY THAT:
   - THE COMBINED VERTICAL COMPACTION PRESSURES AND CONSTRUCTION SURCHARGE BEHIND THE WALL DO NOT EXCEED 5.0 kPa PRESSURE DURING CONSTRUCTION.
   - LATERAL COMPACTION INDUCED PRESSURES ON THE BACK OF THE WALL ARE RELIEVED BEFORE THE END OF CONSTRUCTION.
   - NO COMPACTION IS TO OCCUR WITHIN 300mm FROM THE BACK OF THE WALL.
6. MORTAR TO BE 1 PART CEMENT TO 3 PARTS SAND (BY VOLUME). FACE JOINTS TO BE 25mm NOMINAL WIDTH.
7. ROCKS TO BE SELECTED SPALLS SET IN CEMENT MORTAR BEDS IN HORIZONTAL LAYERS. UNLESS SPECIFIED OTHERWISE OPEN FACE STONEPITCHING TO BE USED WHERE THE MORTAR IS RECESSED 50 BEHIND THE STONE FACING. IF CLOSED FACE STONEPITCHING IS SPECIFIED, MORTAR TO BE FLUSH WITH THE STONE FACING. SELECT SPALLS TO AVOID SHARP EDGES.
8. INSTALL WEEPHOLES IN ADDITION TO THE LONGITUDINAL DRAIN. WEEPHOLES TO BE 50 DIA. UPVC AT 1000 TO 1400 CENTRES, POSITIONED AT APPROX. 100 CONSTANT HEIGHT ABOVE ULTIMATE GROUND LEVEL AND CONNECTED TO THE LONGITUDINAL DRAIN USING STANDARD MANUFACTURERS FITTINGS.
9. LONGITUDINAL DRAIN SHALL BE 300x50 MEGAFLOW OR 100 DIA. CORRUGATED PERFORATED POLYETHYLENE PIPE, ENCASED WITH BIDIM A24 OR EQUIVALENT. THE INVERT OF THE LONGITUDINAL DRAIN SHALL BE 100 BELOW THE INVERT OF THE WEEPHOLE INLET. PREFERABLY THE LONGITUDINAL DRAIN SHALL OUTLET TO THE KERB AND CHANNEL, STORMWATER PIPE OR GULLY AT A MINIMUM SLOPE OF 1 IN 200 AND AT 25m INTERVALS. WHERE SUCH AN OUTLET IS NOT ACHIEVABLE, THE INVERTS OF THE LONGITUDINAL DRAIN AND THE WEEPHOLE INLET SHALL BE ALIGNED TO ALLOW DIRECT DISCHARGE VIA THE WEEPHOLE.
10. ALL CONNECTIONS, INCLUDING THE JOINING OF LENGTHS OF MEGAFLOW OR CORRUGATED PERFORATED POLYETHYLENE PIPE, SHALL BE MADE USING STANDARD MANUFACTURERS FITTINGS.
11. FILTER DRAINAGE LAYER FOR FULL HEIGHT AND LENGTH OF WALL TO BE CORDRAIN OR EQUIVALENT WITH BIDIM A24 GEOTEXTILE OR EQUIVALENT ADHERED TO BOTH SIDES. ALTERNATIVELY, A 300 THICK, FREE DRAINING FILTER SAND/GRAVEL LAYER SEPARATED FROM INSITU MATERIAL WITH A LAYER OF BIDIM A24 GEOTEXTILE.
12. BACKFILL SHALL BE FREE DRAINING, NON PLASTIC PREDOMINANTLY GRANULAR MATERIAL WITH MINIMUM EFFECTIVE FRICTION ANGLE OF 32° AND BULK DENSITY OF 19 kN/m^3. DO NOT PLACE BACKFILL BEHIND THE WALL UNTIL AT LEAST 10 DAYS AFTER WALL CONSTRUCTION.
13. ALL COUNCIL RETAINING WALLS TO BE CONSTRUCTED IN THE ROAD RESERVE WHERE POSSIBLE. PRIVATE WALLS INCLUDING FOOTING TO BE CONTAINED WHOLLY WITHIN PRIVATE PROPERTY.
14. DIMENSIONS IN MILLIMETRES (U.N.O.).

BRISBANE CITY

BRISBANE CITY COUNCIL STANDARD DRAWING

RETAINING WALL
STONEPITCHED

PUBLISH DATE	JUN 2023
SCALE	NOT TO SCALE
DRAWING NUMBER	BSD-2221
ORIGINAL SIZE	A3
REVISION	C

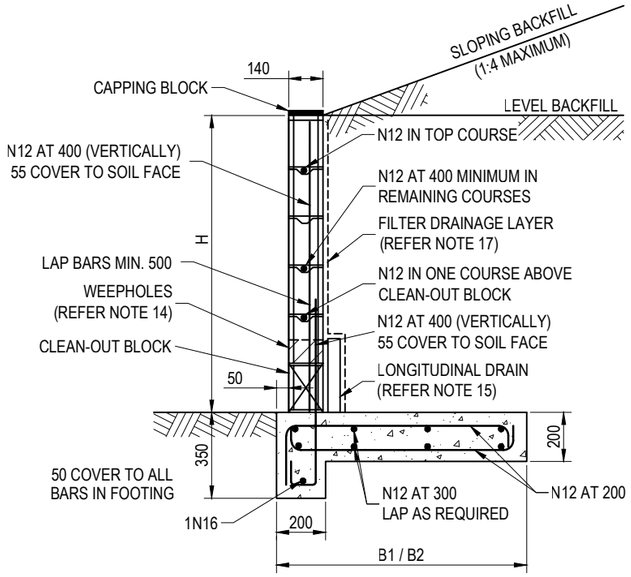

0.8m TO 1.2m HIGH
(150 SERIES BLOCK)

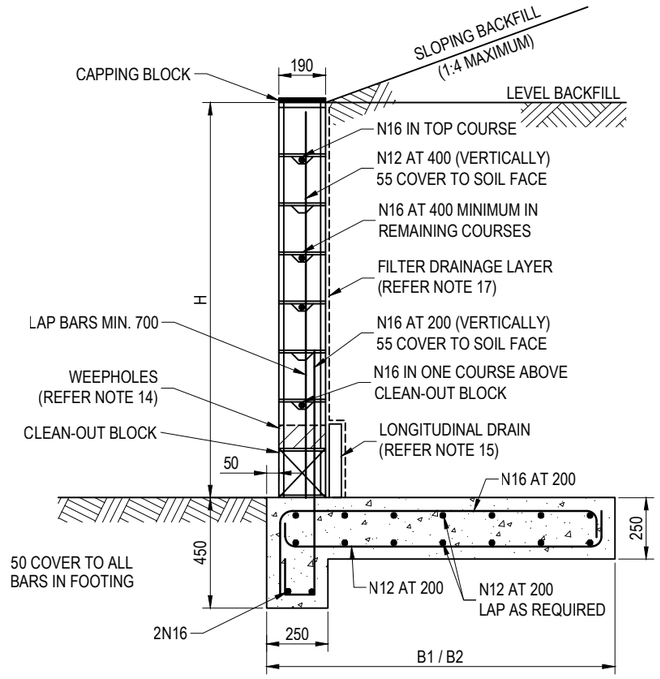

UP TO 1.8m HIGH
(200 SERIES BLOCK)

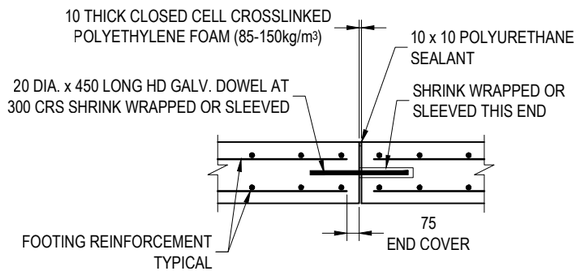

TYPICAL FOOTING
EXPANSION JOINT

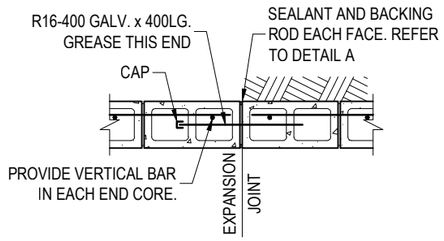

TYPICAL WALL
EXPANSION JOINT

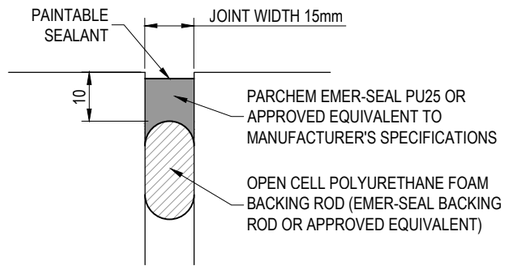

DETAIL A

FOOTING DIMENSIONS

BLOCK SERIES	WALL HEIGHT "H"	LEVEL WITH 5kPa SURCHARGE (B1)	SLOPE UP TO 1 IN 4 WITH 5 kPa SURCHARGE (B2)
150	0 - 800	900	1000
	801 - 1000	1050	1150
	1001 - 1200	1200	1300
200	1201 - 1400	1350	1450
	1401 - 1600	1500	1600
	1601 - 1800	1650	1750

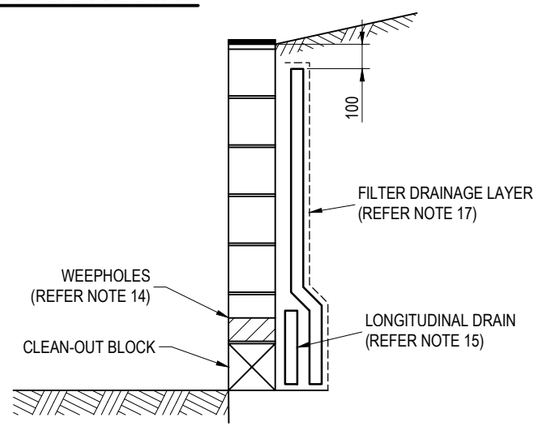

DRAINAGE DETAIL

NOTES:

1. ALL WORKMANSHIP AND MATERIAL SHALL COMPLY WITH AS3600,AS3700 AND ALL OTHER RELEVANT AUSTRALIAN STANDARDS AND WORKPLACE HEALTH AND SAFETY REGULATIONS THAT ARE CURRENT AT THE TIME OF CONSTRUCTION.
2. VERIFY LOCATIONS OF ALL SERVICES PRIOR TO COMMENCING WORK AND AVOID OVERSTRESSING AND DESTABILISING SERVICES AND EXISTING STRUCTURES DUE TO RETAINING WALL CONSTRUCTION.
3. THE WALLS HAVE BEEN DESIGNED IN ACCORDANCE WITH *AS4678* - 2002 FOR A DESIGN LIFE OF 50 YEARS AND ON THE ASSUMPTION THAT A MINIMUM ALLOWABLE BEARING CAPACITY OF 100 KPa, A MINIMUM EFFECTIVE FRICTION ANGLE OF 32° AND BULK DENSITY OF 19 kN/m^3 ARE AVAILABLE ON SITE FOR FOUNDING MATERIAL. A GEOTECHNICAL ENGINEER (RPEQ) SHALL CERTIFY THAT THE ASSUMED GEOTECHNICAL PARAMETERS IN NOTE 1 COULD BE ACHIEVED ON SITE. IF THEY CANNOT BE ACHIEVED, A STRUCTURAL ENGINEER (RPEQ) SHALL BE CONSULTED TO REDESIGN THE FOOTINGS.
4. THE DESIGN IS NOT FOR VEHICLE LOADINGS HENCE A VEHICLE LOAD ON THE UPHILL LEVEL SHALL BE NO CLOSER THAN "H" FROM THE REAR CAPPING EDGE. THE DESIGN DOES NOT ALLOW FOR FENCES/BALUSTRADES OR OTHER BARRIERS TO BE FIXED TO THE WALL.
5. BACKFILL SHALL BE FREE DRAINING, NON-PLASTIC PREDOMINANTLY GRANULAR MATERIAL WITH MINIMUM EFFECTIVE FRICTION ANGLE OF 32° AND BULK DENSITY OF 19 kN/m^3. DO NOT PLACE BACKFILL BEHIND THE WALL UNTIL COREFILL REACHES A MINIMUM OF 20 MPa.
6. THE CONTRACTOR'S GEOTECHNICAL ENGINEER (RPEQ) SHALL CERTIFY THAT:
   - THE COMBINED VERTICAL COMPACTION PRESSURES AND CONSTRUCTION SURCHARGE BEHIND THE WALL DO NOT EXCEED 5.0 kPa PRESSURE DURING CONSTRUCTION;
   - LATERAL COMPACTION INDUCED PRESSURES ON THE BACK OF THE WALL ARE RELIEVED BEFORE THE END OF CONSTRUCTION; AND
   - NO COMPACTION IS TO OCCUR WITHIN 300mm FROM THE BACK OF THE WALL.
7. ALL CONCRETE BLOCKWORK SHALL BE CONSTRUCTED IN ACCORDANCE WITH *AS3700*.
8. BLOCKS SHALL HAVE A MINIMUM STRENGTH OF 15MPa, MORTAR IS TO BE CLASS M3 IN ACCORDANCE WITH *AS3700*.
9. MORTAR FINS PROTRUDING INTO CORES TO BE REMOVED BEFORE GROUTING.
10. ALL CORES SHALL BE FILLED WITH GROUT, WHETHER REINFORCED OR NOT.
11. GROUT FOR FILLING BLOCKWORK SHALL HAVE A MINIMUM CHARACTERISTIC STRENGTH OF 25 MPa (REFER *AS3700*) WITH A SLUMP OF 230 +/- 30. MAXIMUM AGGREGATE SIZE SHALL BE 10mm.
12. CONCRETE FOOTINGS ARE BASED ON EXPOSURE CLASSIFICATION A2 IN ACCORDANCE WITH *AS3600*. CONCRETE GRADE SHALL BE N25 MINIMUM. A STRUCTURAL ENGINEER (RPEQ) SHALL BE CONSULTED TO REDESIGN THE FOOTINGS IF A WORSE EXPOSURE CLASSIFICATION IS FOUND ON SITE.
13. REINFORCING STEEL SHALL BE GRADE D500N TO *AS4671*.
14. INSTALL WEEPHOLES IN ADDITION TO THE LONGITUDINAL DRAIN FOR MAINTENANCE AND OVERFLOW PURPOSES. WEEPHOLES TO BE A VERTICAL JOINT VOID OF MORTAR ON THE LOWER HALF OF THE JOINT, SPACED AT 1000 MAX. CENTRES, AND POSITIONED AT A CONSTANT HEIGHT OF APPROXIMATELY 200 ABOVE ULTIMATE GROUND LEVEL.
15. LONGITUDINAL DRAIN SHALL BE 300x50 MEGAFLOW OR STRIP DRAIN OR 100 DIA. CORRUGATED PERFORATED POLYETHYLENE PIPE, ENCASED WITH BIDUM A24 OR EQUIVALENT. THE INVERT OF THE LONGITUDINAL DRAIN SHALL BE 200 BELOW THE INVERT OF THE WEEPHOLE INLET. THE LONGITUDINAL DRAIN SHALL OUTLET TO THE KERB AND CHANNEL, STORMWATER PIPE OR GULLY AT A MINIMUM SLOPE OF 1 IN 200 AND AT 25m INTERVALS. WHERE SUCH AN OUTLET IS NOT ACHIEVABLE, THE INVERTS OF THE LONGITUDINAL DRAIN AND THE WEEPHOLE INLET SHALL BE ALIGNED TO ALLOW DIRECT DISCHARGE VIA THE WEEPHOLE.
16. ALL CONNECTIONS, INCLUDING THE JOINING OF LENGTHS OF STRIP DRAIN, SHALL BE MADE USING STANDARD MANUFACTURER FITTINGS.
17. FILTER DRAINAGE LAYER FOR FULL HEIGHT AND LENGTH OF WALL SHALL BE CORDRAIN OR APPROVED EQUIVALENT WITH BIDUM A24 OR APPROVED EQUIVALENT ADHERED TO ONE SIDE ABUTTING THE BACKFILL. ALTERNATIVELY, A 300 THICK FREE DRAINING, FILTER SAND/GRAVEL LAYER SEPARATED FROM THE INSITU MATERIAL BY TYPE BIDUM A24 OR EQUIVALENT IS ACCEPTABLE.
18. PROVIDE EXPANSION JOINTS IN WALLS AND FOOTINGS AT 12m MAX CRS. AND 6m MAX FROM CORNERS AND ENDS TYP.
19. ALL COUNCIL RETAINING WALLS TO BE CONSTRUCTED IN THE ROAD RESERVE WHERE POSSIBLE. PRIVATE WALLS INCLUDING FOOTING TO BE CONTAINED WHOLLY WITHIN PRIVATE PROPERTY.
20. DIMENSIONS IN MILLIMETRES (U.N.O.).

BRISBANE CITY

BRISBANE CITY COUNCIL STANDARD DRAWING

RETAINING WALL
CONCRETE BLOCK
TYPE 1 FOOTING

PUBLISH DATE	JUN 2023
SCALE	NOT TO SCALE
DRAWING NUMBER	BSD-2222
ORIGINAL SIZE	A3
REVISION	C

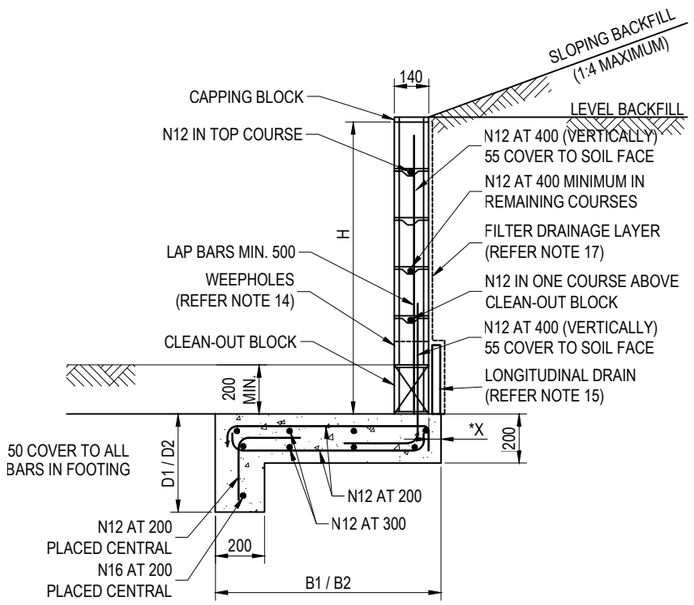

0.8m TO 1.2m HIGH (150 SERIES BLOCK)

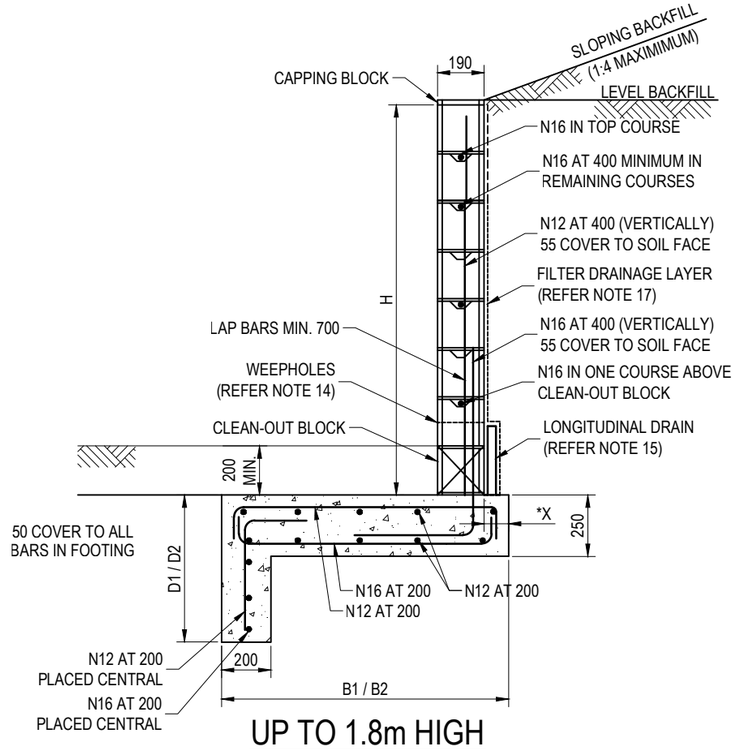

UP TO 1.8m HIGH (200 SERIES BLOCK)

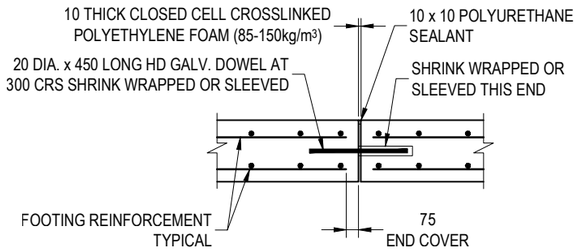

TYPICAL FOOTING EXPANSION JOINT

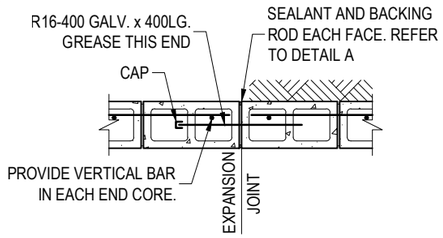

TYPICAL WALL EXPANSION JOINT

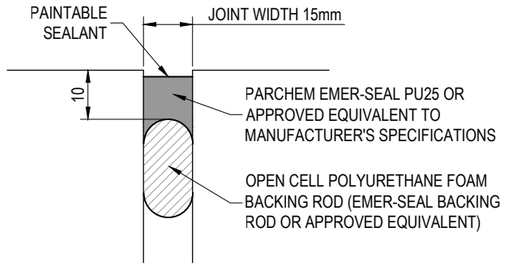

DETAIL A

FOOTING DIMENSIONS

BLOCK SERIES	WALL HEIGHT "H"	LEVEL BACKFILL 5kPa SURCHARGE			SLOPING BACKFILL (1:4 MAXIMUM) 5kPa SURCHARGE		
		WIDTH "B1"	DEPTH "D1"	"* X"	WIDTH "B2"	DEPTH "D2"	"* X"
150	0 - 800	850	-	50	1150	-	50
	801 - 1000	950	350	50	1150	400	50
	1001 - 1200	1250	450	50	1550	500	50
200	1201 - 1400	1400	550	50	1750	650	100
	1401 - 1600	1700	650	50	2250	800	100
	1601 - 1800	2250	750	50	3000	900	100

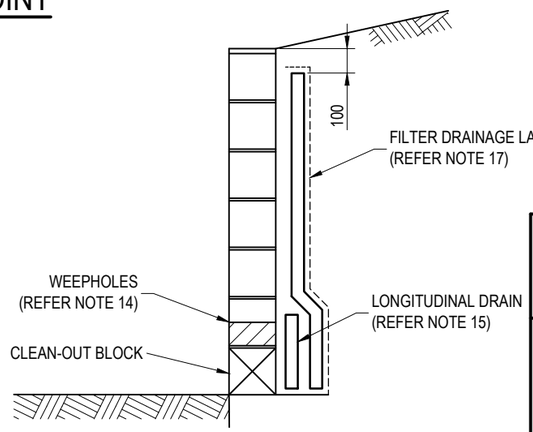

DRAINAGE DETAIL

NOTES:

1. ALL WORKMANSHIP AND MATERIAL SHALL COMPLY WITH AS3600,AS3700 AND ALL OTHER RELEVANT AUSTRALIAN STANDARDS AND WORKPLACE HEALTH AND SAFETY REGULATIONS THAT ARE CURRENT AT THE TIME OF CONSTRUCTION.
2. VERIFY LOCATIONS OF ALL SERVICES PRIOR TO COMMENCING WORK AND AVOID OVERSTRESSING AND DESTABILISING SERVICES AND EXISTING STRUCTURES DUE TO RETAINING WALL CONSTRUCTION.
3. THE WALLS HAVE BEEN DESIGNED IN ACCORDANCE WITH *AS4678* - 2002 FOR A DESIGN LIFE OF 50 YEARS AND ON THE ASSUMPTION THAT A MINIMUM ALLOWABLE BEARING CAPACITY OF 100 KPa, A MINIMUM EFFECTIVE FRICTION ANGLE OF 32° AND BULK DENSITY OF 19kN/m^3 ARE AVAILABLE ON SITE FOR FOUNDING MATERIAL. A GEOTECHNICAL ENGINEER (RPEQ) SHALL CERTIFY THAT THE ASSUMED GEOTECHNICAL PARAMETERS IN NOTE 1 COULD BE ACHIEVED ON SITE. IF THEY CANNOT BE ACHIEVED, A STRUCTURAL ENGINEER (RPEQ) SHALL BE CONSULTED TO REDESIGN THE FOOTINGS.
4. THE DESIGN IS NOT FOR VEHICLE LOADINGS HENCE A VEHICLE LOAD ON THE UPHILL LEVEL SHALL BE NO CLOSER THAN "H" FROM THE REAR CAPPING EDGE. THE DESIGN DOES NOT ALLOW FOR FENCES/BALUSTRADES OR OTHER BARRIERS TO BE FIXED TO THE WALL.
5. BACKFILL SHALL BE FREE DRAINING, NON-PLASTIC PREDOMINANTLY GRANULAR MATERIAL WITH MINIMUM EFFECTIVE FRICTION ANGLE OF 32° AND BULK DENSITY OF 19kN/m^3. DO NOT PLACE BACKFILL BEHIND THE WALL UNTIL COREFILL REACHES A MINIMUM OF 20MPa.
6. THE CONTRACTOR'S GEOTECHNICAL ENGINEER (RPEQ) SHALL CERTIFY THAT:
   - THE COMBINED VERTICAL COMPACTION PRESSURES AND CONSTRUCTION SURCHARGE BEHIND THE WALL DO NOT EXCEED 5.0 kPa PRESSURE DURING CONSTRUCTION;
   - LATERAL COMPACTION INDUCED PRESSURES ON THE BACK OF THE WALL ARE RELIEVED BEFORE THE END OF CONSTRUCTION; AND
   - NO COMPACTION IS TO OCCUR WITHIN 300mm FROM THE BACK OF THE WALL.
7. ALL CONCRETE BLOCKWORK SHALL BE CONSTRUCTED IN ACCORDANCE WITH *AS3700*.
8. BLOCKS SHALL HAVE A MINIMUM STRENGTH OF 15MPa, MORTAR IS TO BE CLASS M3 IN ACCORDANCE WITH *AS3700*.
9. MORTAR FINS PROTRUDING INTO CORES TO BE REMOVED BEFORE GROUTING.
10. ALL CORES SHALL BE FILLED WITH GROUT, WHETHER REINFORCED OR NOT.
11. GROUT FOR FILLING BLOCKWORK SHALL HAVE A MINIMUM CHARACTERISTIC STRENGTH OF 25 MPa (REFER *AS3700*) WITH A SLUMP OF 230 +/- 30. MAXIMUM AGGREGATE SIZE SHALL BE 10mm.
12. CONCRETE FOOTINGS ARE BASED ON EXPOSURE CLASSIFICATION A2 IN ACCORDANCE WITH *AS3600*. CONCRETE GRADE SHALL BE N25 MINIMUM. A STRUCTURAL ENGINEER (RPEQ) SHALL BE CONSULTED TO REDESIGN THE FOOTINGS IF A WORSE EXPOSURE CLASSIFICATION IS FOUND ON SITE.
13. REINFORCING STEEL SHALL BE GRADE D500N TO *AS4671*.
14. INSTALL WEEPHOLES IN ADDITION TO THE LONGITUDINAL DRAIN FOR MAINTENANCE AND OVERFLOW PURPOSES. WEEPHOLES TO BE A VERTICAL JOINT VOID OF MORTAR ON THE LOWER HALF OF THE JOINT, SPACED AT 1000 MAX. CENTRES, AND POSITIONED AT A CONSTANT HEIGHT OF APPROXIMATELY 200 ABOVE ULTIMATE GROUND LEVEL.
15. LONGITUDINAL DRAIN SHALL BE 300x50 MEGAFLOW OR STRIP DRAIN OR 100 DIA. CORRUGATED PERFORATED POLYETHYLENE PIPE, ENCASED WITH BIDUM A24 OR EQUIVALENT. THE INVERT OF THE LONGITUDINAL DRAIN SHALL BE 200 BELOW THE INVERT OF THE WEEPHOLE INLET. THE LONGITUDINAL DRAIN SHALL OUTLET TO THE KERB AND CHANNEL, STORMWATER PIPE OR GULLY AT A MINIMUM SLOPE OF 1 IN 200 AND AT 25m INTERVALS. WHERE SUCH AN OUTLET IS NOT ACHIEVABLE, THE INVERTS OF THE LONGITUDINAL DRAIN AND THE WEEPHOLE INLET SHALL BE ALIGNED TO ALLOW DIRECT DISCHARGE VIA THE WEEPHOLE.
16. ALL CONNECTIONS, INCLUDING THE JOINING OF LENGTHS OF STRIP DRAIN, SHALL BE MADE USING STANDARD MANUFACTURER FITTINGS.
17. FILTER DRAINAGE LAYER FOR FULL HEIGHT AND LENGTH OF WALL SHALL BE CORDRAIN OR APPROVED EQUIVALENT WITH BIDUM A24 OR APPROVED EQUIVALENT ADHERED TO ONE SIDE ABUTTING THE BACKFILL. ALTERNATIVELY, A 300 THICK FREE DRAINING, FILTER SAND/GRAVEL LAYER SEPARATED FROM THE INSITU MATERIAL BY TYPE BIDUM A24 OR EQUIVALENT IS ACCEPTABLE.
18. PROVIDE EXPANSION JOINTS IN WALLS AND FOOTINGS AT 12m MAX CRS. AND 6m MAX FROM CORNERS AND ENDS TYPICALLY.
19. ALL COUNCIL RETAINING WALLS TO BE CONSTRUCTED IN THE ROAD RESERVE WHERE POSSIBLE. PRIVATE WALLS INCLUDING FOOTING TO BE CONTAINED WHOLLY WITHIN PRIVATE PROPERTY.
20. DIMENSIONS IN MILLIMETRES (U.N.O.).

BRISBANE CITY

BRISBANE CITY COUNCIL STANDARD DRAWING

RETAINING WALL
CONCRETE BLOCK
TYPE 2 FOOTING

PUBLISH DATE	JUN 2023
SCALE	NOT TO SCALE
DRAWING NUMBER	BSD-2223
ORIGINAL SIZE	A3
REVISION	C

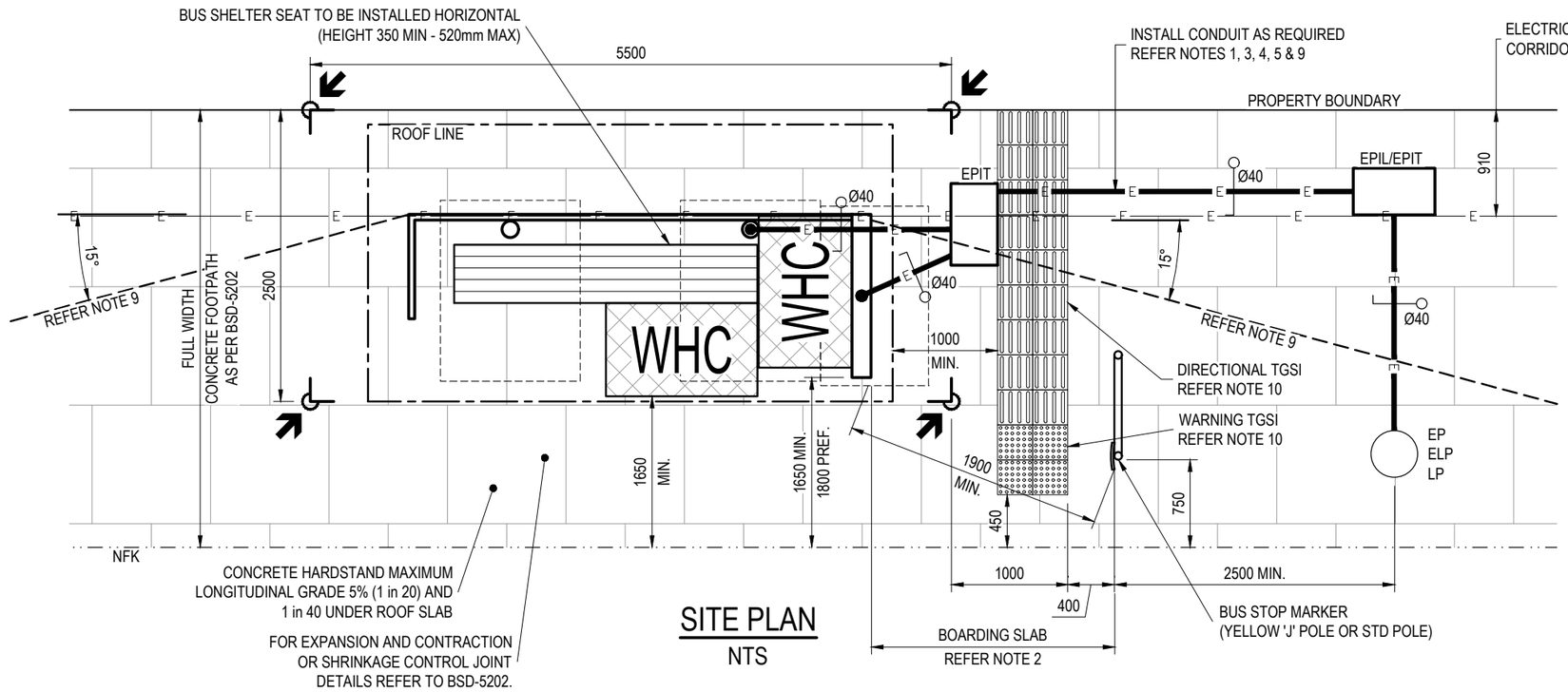

SITE PLAN
NTS

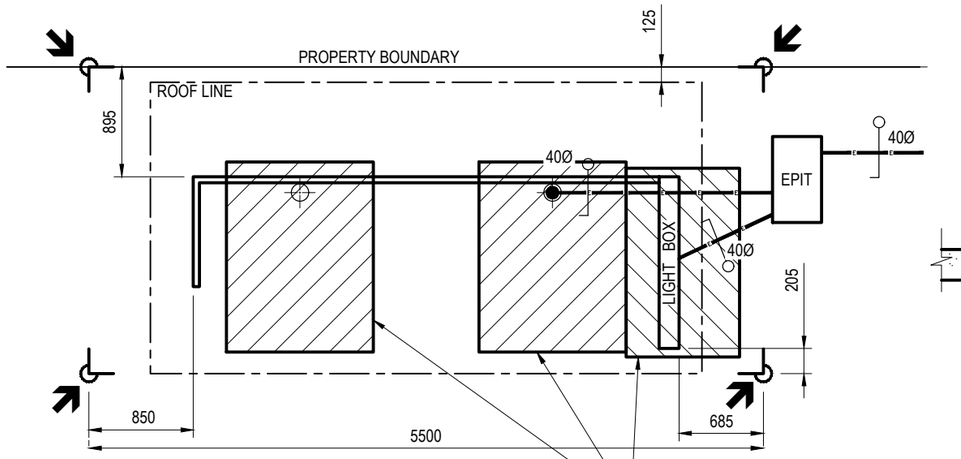

FOOTING DETAILS
NTS

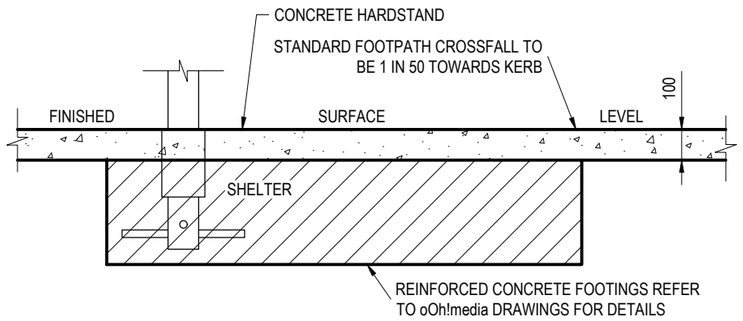

TYPICAL FOOTING SECTION
NTS

LEGEND

- SETOUT POINTS (INCLUDING FINISHED SURFACE LEVELS) TO BE MARKED ON SITE FOR oOh!media TO CONSTRUCT FOOTINGS
- Ø40 uPVC ORANGE (HD) CONDUIT WITH CABLE PROTECTION COVER STRIP
- NFK — NOMINAL FACE OF KERB
- HAZARD TACTILE GROUND SURFACE INDICATORS AS PER AS1428.4.1 (SEE NOTE 11)
- DIRECTIONAL TACTILE GROUND SURFACE INDICATORS AS PER AS1428.4.1 (SEE NOTE 11)
- WHC — ALLOCATED WHEELCHAIR SPACE (1300x800)

TABLE 1: LED LUMINAIRES EFFICACY REQUIREMENTS

	LED LAMPS		LED LUMINAIRES (SMALL)	LED PLANAR, BATTENS & TROFFERS
	DIRECTIONAL & NON-DIRECTIONAL LAMPS	LINEAR LED (TUBE)	LUMINOUS FLUX ≥100 lm & <2,500 lm	
EFFICACY	≥65 lm/W (PRIOR TO 31/12/2019)	≥100 lm/W (PRIOR TO 31/12/2019)	≥65 lm/W (PRIOR TO 31/12/2019)	≥90 lm/W (PRIOR TO 31/12/2019)
	≥85 lm/W (FROM 01/01/2020)	≥110 lm/W (FROM 01/01/2020)	≥85 lm/W (FROM 01/01/2020)	≥110 lm/W (FROM 2020)

NOTES:

1. TO BE READ IN CONJUNCTION WITH oOh!media DRAWINGS. oOh!media SHELTERS ARE INSTALLED AND MAINTAINED BY oOh!media UNDER A CONTRACT TO COUNCIL.
2. WHERE BUS STOP BOARDING SLAB HAS A CROSSFALL GREATER THAN 1 in 40 (IN BOTH DIRECTIONS) OR VERGE IS LESS THAN MINIMUM WIDTH SHOWN, REFER TO BRISBANE CITY COUNCIL PUBLIC TRANSPORT FACILITIES FOR DDA COMPLIANCE ADVICE.
3. POWER SUPPLY MUST BE RATE 2. LIGHT BOX POWER SUPPLY MUST BE RATE 2 UNMETERED TARIF 21).
4. 600 MIN. COVER TO CONDUITS.
5. HARDSTANDS TO BE 150mm THICK BROOM FINISHED (FOR SLIP RESISTANCE) OR HONED PATTERNED FINISH TO BSD-5207 GRADE N32 CONCRETE. SL82 MESH PLACED CENTRALLY. LEVELS TO BE CONFIRMED PRIOR TO CONCRETE POUR.
6. ALTERNATIVE SURFACE FINISHES (IE. EXPOSED AGGREGATE OR PAVERS) TO COMPLY WITH DISABILITY STANDARD FOR LUMINANCE CONTRAST AND/OR AESTHETICS FOR 'CITY SIGNATURE' REQUIREMENTS, AS REQUIRED.
7. THE ALIGNMENT AND DEPTHS OF EXISTING SERVICES SHALL BE PROVEN ON SITE PRIOR TO ANY EXCAVATION. CONTACT "DIAL BEFORE YOU DIG" ON TEL. NO. 1100 FOR THE LOCATION OF SERVICE AUTHORITY ASSETS.
8. POINT OF SUPPLY PRIORITY:
   1. EP/ELP (ELECTRICITY POWER/LIGHT POLE)
   2. EPIL (ELECTRICITY PILLAR)
   3. EPIT (ELECTRICITY No.4 PIT)
   4. LP (STREET LIGHT POLE)
9. WHERE PLANTINGS ARE PROVIDED, USE ONLY GROUND COVER OR LOW SHRUBS (<0.5m HIGH). TREES FOR SHADE SHOULD BE LONG-TRUNKED WITH MINIMUM BRANCH HEIGHT OF 4.5m. PLANTINGS SHOULD NOT OBSTRUCT LINE OF SIGHT BETWEEN APPROACHING VEHICLES AND LIGHT BOX DISPLAY. (PUBLIC TRANSPORT FACILITIES TO APPROVE LAYOUT).
10. TGSIs
    a. TGSI MATERIALS, COLOURS AND INSTALLATION TO BSD-5218.
    b. WHOLE TGSI TO BE PLACED AT END OF PAD. TGSI'S TO BE CUT TO ENSURE THAT NO TGSI IS LESS THAN 150mm LONG.
    c. TGSI TO EXTEND FULL WIDTH OF PATH (i.e. TO REAL PROPERTY BOUNDARY).
    d. TACTILE MAT (POLYURETHANE OR SIMILAR) TGSIs MAY ONLY BE USED AT TEMPORARY BUS STOPS, AND FOR NO LONGER THAN 6 MONTHS.
11. STORMWATER SOLUTION/DESIGN TO BE ASSESSED ON A SITE-BY-SITE BASIS.
12. LONGITUDINAL GRADE TO MATCH ROAD.
13. REFER INFRASTRUCTURE DESIGN PLANNING SCHEME POLICY FOR LAYOUT AND ON-ROAD REQUIREMENTS.
14. ALL DIMENSIONS ARE IN MILLIMETERS (U.N.O.).

LIGHTING NOTES:

L1. ILLUMINATION WITH THE BUS SHELTER TO COMPLY WITH *AS1158.3.1* - LIGHTING FOR ROADS AND PUBLIC SPACES - PART 3.1 - PEDESTRIAN AREA (CATEGORY P) LIGHTING - PERFORMANCE AND DESIGN REQUIREMENTS SUB CATEGORY P6.

L2. THE LUMINAIRE DISTRIBUTOR SHOULD ALSO SUPPLY PHOTOMETRIC DATA (IN IES AND/OR CIE FORMAT) FROM A NATA ACCREDITED LABORATORY OR A LABORATORY, WHOSE ACCREDITATION IS RECOGNISED BY NATA UNDER THE MUTUAL RECOGNITION SCHEME.

L3. LUMINAIRE/LIGHT IS TO BE POSITIONED AT THE FRONT OF THE SHELTER FROM THE ROOF. LIGHTING IS TO NOT ADVERSELY IMPACT ON THE ADJACENT TRAFFIC.

L4. LUMINAIRE IS TO BE PRE-WIRED INTO THE SHELTER.

L5. SWITCHBOARD FOR THE SHELTER IS TO BE LOCATED IN THE REAR POST. PE CELL IS TO BE LOCATED ON THE SAME POST IN A POSITION THAT WILL NOT BE IMPACTED BY LIGHTING IN THE PROXIMITY.

L6. LIGHT SOURCE IS TO BE LED TECHNOLOGY WITH A CORRELATED COLOUR TEMPERATURE (CCT) OF 4000K AND A COLOUR RENDERING INDEX (CRI) Ra ≥80.

L7. LED LUMINAIRES OR LAMPS USED FOR BRISBANE CITY COUNCIL SHALL COMPLY WITH THE FOLLOWING MINIMUM ENERGY PERFORMANCE STANDARDS (MEPS) EFFICACY REQUIREMENTS. THE EFFICACY CALCULATION SHALL BE BASED ON INITIAL LUMINOUS FLUX MEASUREMENTS ACCORDING TO CIE S 025/E (OR IES LM-79).

ISSUE	AMENDMENT	DRAWN DATE	CHK'D DATE	APPR'D DATE
C	Dwg Title & Note 1 Amended (Adshel to oOh!media)' Shelter Lighting Requirements Add.	JAN '19	APR '19	Apr RPEQ 16110 '19
B	Dimensions Corrected, Note 10 Updated, Notes 11-13 Added	JUN '18	JUL '18	NOV '18
A	Drawing Converted from UMS Series April 2014	APR '14	APR '14	APR '14

DRAWING AUTHORISED FOR PUBLICATION
P.COTTON SIGNATURE ON ORIGINAL
DATED 21/03/06 R.P.E.Q: 2 5 4 6
ASSET ENGINEERING MANAGER
STRATEGIC ASSET MANAGEMENT

DESIGN APPROVED
B.HANSON SIGNATURE ON ORIGINAL
DATED 13/03/06
PRINCIPAL ENGINEER
STRATEGIC INFRASTRUCTURE MANGEMENT

DESIGN	DBS City Design	DATE	May '04
DRAWN	MAB City Design	DATE	May '04
CHECKED	DJL City Assests	DATE	Nov '05
DRAWING FILENAME	BSD-2108 (C) oOh!media 'Boulevard' bus shelter.dwg		
ASSOCIATED PLANS	SUPERSEDES UMS-276		

BRISBANE CITY

BRISBANE CITY COUNCIL STANDARD DRAWING

oOh!media 'BOULEVARD'
BUS SHELTER

SCALE: NOT TO SCALE
DWG No.: BSD-2108
ORIGINAL SIZE: A3
REVISION: C